Data Sheet DS/FCB300/FCH300-EN Rev. D

CoriolisMaster FCB330, FCB350, FCH330, FCH350
Coriolis Mass Flowmeter

4-wire compact device
For flow measurement of liquids and gases

CoriolisMaster simply fits!

The ideal NAMUR Standard Device

Measurement of massflow and volumeflow, density, temperature and concentration with only one meter with minimal investment costs

Minimum installation space requirements due to compact design

Minimum lifetime costs

FCH300 for all hygienic applications — EHEDG-certified

Minimum pressure drop, no moving parts, no wear out

Self draining: no measuring media residues remain in the meter

Worldwide approvals for hazardous areas and hygienic applications

State of the art transmitter
- Easy handling
- Data safety due to unique sensor memory concept
- Concentration measurement

Power and productivity
for a better world™

CoriolisMaster FCB330, FCB350, FCH330, FCH350
Coriolis Mass Flowmeter

Overview of flowmeter sensor and transmitter designs

General remarks

	FCB3xx and FCH3xx flowmeter sensor (integral mount design)			
	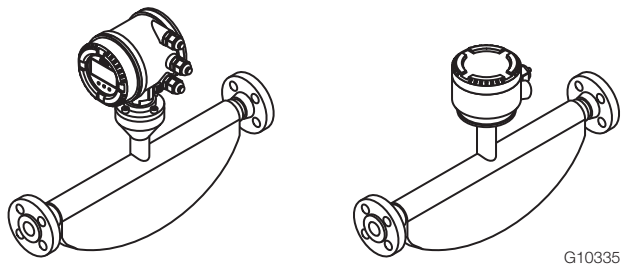			
Model number	FCB300 for standard applications		FCH300 for hygienic applications	
Process connections				
— Flange DIN 2501 / EN 1092-1	DN 10 … 200, PN 40 … 100		-	
— Flange ASME B16.5	DN 1/4“ … 8“ PN CL150 … CL600		-	
— Threaded pipe connection DIN 11851	DN 10 … 100 (1/4“ … 4“)		DN 15 … 80 (1/2“ … 3“)	
— Tri-Clamp	DIN 32676 (ISO 2852) BPE Tri-Clamp DN 10 … 100 (1/4“ … 4“)		DIN 32676 (ISO 2852) BPE Tri-Clamp DN 10 … 100 (1/4“ … 4“)	
— Other connections	On request		On request	
Wetted materials	Stainless steel Hasteloy C (optional)		Stainless steel, polished 1.4404 (AISI 316L) or 1.4435 (AISI 316L)	
Degree of protection acc. to EN 60529	IP 65 / 67, NEMA 4X		IP 65 / 67, NEMA 4X	
Approvals and certificates				
— Explosion protection ATEX / IECEx	Zone 0, 1, 2, 21, 22		Zone 0, 1, 2, 21, 22	
— Explosion protection cFMus	Class I Div. 1, Class I Div. 2, Zone 0, 1, 2, 20, 21		Class I Div. 1, Class I Div. 2, Zone 0, 1, 2, 20, 21	
— Explosion protection NEPSI	Zone 0, 1, 2, 21, 22		Zone 0, 1, 2, 21, 22	
— Hygienic and sterile requirements	-		EHEDG, FDA	
— Other approvals	On request			
Enclosure	Integral mount design, remote mount design			
Measuring accuracy for liquids	FCB330	FCB350	FCH330	FCH350
— Mass flow [1]	0,4 % and 0,25 %	0,1 % and 0,15 %	0,4 % and 0,25 %	0,1 % and 0,15 %
— Volume flow [1]	0,4 % and 0,25 %	0,15 %	0,4 % and 0,25 %	0,15 %
— Density	0,01 kg/l	— 0,002 kg/l — 0,001 kg/l (option) — 0,0005 kg/l [2]	0,01 kg/l	— 0,002 kg/l — 0,001 kg/l (option) — 0,0005 kg/l [2]
— Temperature	1 K	0,5 K	1 K	0,5 K
Measuring accuracy for gases [1]	1 %	0,5 %	1 %	0,5 %
Permissible temperature of the medium being measured	-50 … 160 °C (-58 … 320 °F)	-50 … 200 °C (-58 … 392 °F)	-50 … 160 °C (-58 … 320 °F)	-50 … 200 °C (-58 … 392 °F)

1) Stated measuring accuracy in % of rate (% o. r.)
2) Measuring accuracy following on-site calibration under operating conditions

	FCTxxx transmitter	
	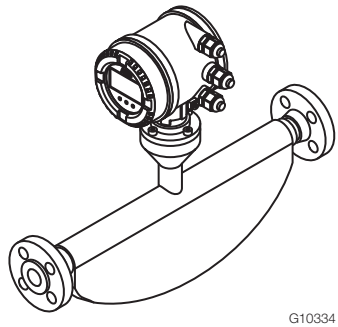 G10334	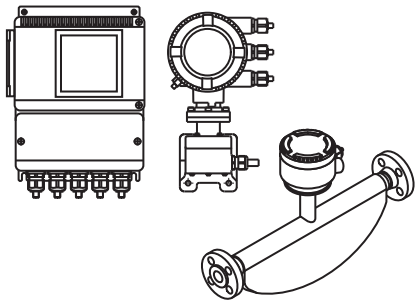 G10846
Enclosure	Integral mount design	Remote mount design
Cable length	Maximum 10 m (33 ft), remote mount design only	
Power supply	100 … 230 V AC, 24 V AC/DC	
Current output	Current output 1: 0/4 … 20 mA active or 4 … 20 mA passive Current output 2: 4 … 20 mA passive	
Pulse output	Active (not Zone 1 / Div. 1) or passive	
External output zero return	Yes	
External totalizer reset	Yes	
Forward / reverse flow metering	Yes	
Communication	HART protocol	
Empty pipe detection	Yes, based on preconfigured density alarm < 0.5 kg/l	
Self-monitoring and diagnostics	Yes	
Local display / totalization	Yes	
Field optimization for flow and density	Yes	
Degree of protection acc. to EN 60529	Integral mount design: IP 65/IP 67, NEMA 4X Remote mount design: IP 67, NEMA 4X	

CoriolisMaster FCB330, FCB350, FCH330, FCH350
Coriolis Mass Flowmeter

ATEX / IECEx device overview

	Standard / No explosion protection		Zone 2, 21, 22		Zone 1, 21 (Zone 0)	
Model number	**FCx3xx Y0**		**FCx3xx A2, S2**		**FCx3xx A1, S1**	
Integral mount design — Standard — Zone 2, 21, 22 — Zone 1, 21 — Zone 0	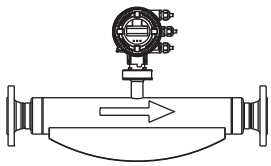 G11455-01a		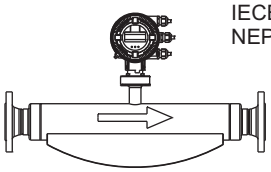 ATEX IECEx NEPSI G11455-01b		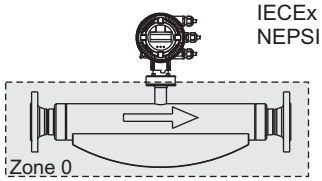 ATEX IECEx NEPSI Zone 0 G11455-01c	
Model number	**FCT3xx Y0**	**FCx3xx Y0**	**FCT3xx A2**	**FCT3xx Y0**	**FCx3xx Y0**	**FCT3xx A2**
Remote mount design Transmitter and flowmeter sensor — Standard — Zone 2, 21, 22 — Zone 1, 21 — Zone 0	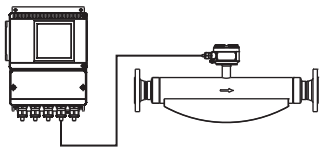 G11455-01d		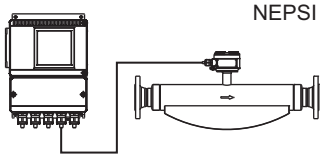 ATEX IECEx NEPSI G11455-01e		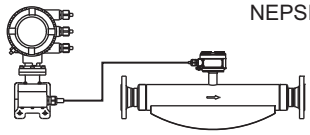 ATEX IECEx NEPSI G11455-01f	
Model number	**FCT3xx Y0**		**FCT3xx A2**		**FCx3xx A1, S1**	
Remote mount design Transmitter — Standard — Zone 2, 21, 22 Flowmeter sensor — Zone 1, 21 — Zone 0	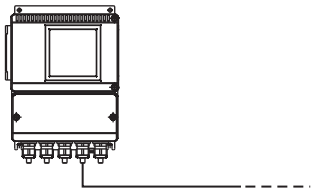 G11455-01g		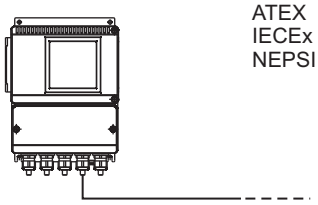 ATEX IECEx NEPSI G11455-01h		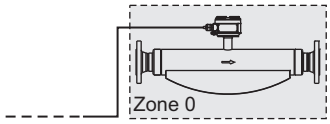 ATEX IECEx NEPSI Zone 0 G11455-01i	

IMPORTANT (NOTE)

Details can be found in chapter „Ex relevant specifications acc. to ATEX / IECEx / NEPSI“ or in the respective certificate.

cFMus device overview

	Standard / No explosion protection		Class I Div. 2 Zone 2, 21		Class I Div. 1 Zone 0, 1, 20 ,21	
Model number	**FCx3xx Y0**		**FCx3xx F2**		**FCx3xx F1**	
Integral mount design — Standard — Class I Div. 2 — Class I Div. 1 — Zone 2, 21 — Zone 1, 21 — Zone 0, 20	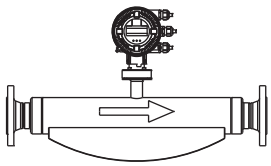		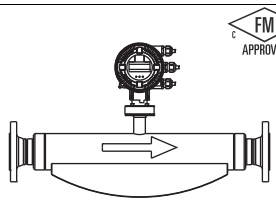		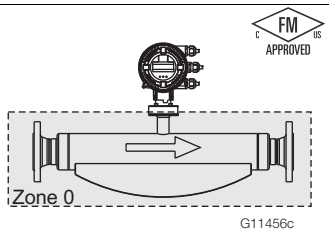	
Model number	**FCT3xx Y0**	**FCx3xx Y0**	**FCT3xx F2**	**FCT3xx Y0**	**FCx3xx Y0**	**FCT3xx F2**
Remote mount design Transmitter and flowmeter sensor — Standard — Class I Div. 2 — Class I Div. 1 — Zone 2, 21 — Zone 1, 21 — Zone 0, 20	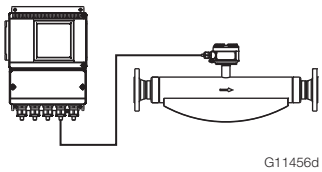		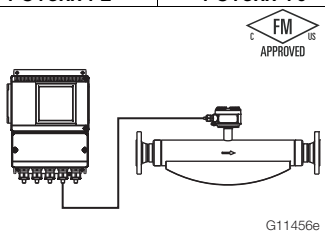		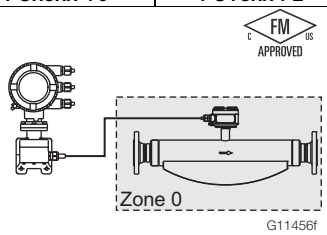	
Model number	**FCT3xx Y0**		**FCT3xx F2**		**FCFCx3xx F1**	
Remote mount design Transmitter — Standard — Class I Div. 2 — Zone 2, 21 Flowmeter sensor — Class I Div. 1 — Zone 1, 21 — Zone 0, 20	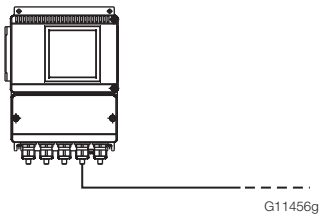		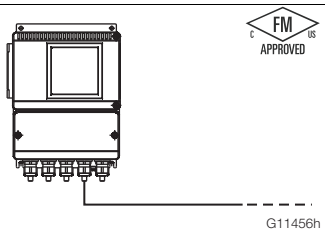		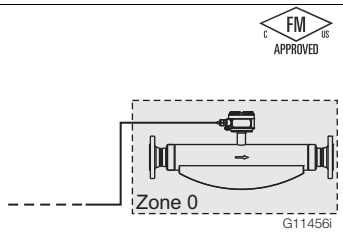	

IMPORTANT (NOTE)

Details can be found in chapter „Ex relevant specifications acc. to cFMus“ or in the respective certificate.

General data

Device description

The CoriolisMaster FCB330, FCB350, FCH330, FCH350 is the most cost-effective and least complex ABB mass flowmeter featuring the new DSP transmitter.
The device is available in the integral mount design with internal transmitter and in the remote mount design with external transmitter.
The integral mount design reduces the time and effort spent on installation and wiring. Flowrate information can be viewed directly at the meter site and the meter can be installed in systems saving even more space than is currently possible.

The CoriolisMaster FCB330, FCB350, FCH330, FCH350 operates according to the Coriolis principle. The design offers the following benefits:

- Space-saving, rugged design
- Variety of process connection options
- Two separate current outputs for measuring mass or volume flow, density, or temperature, as well as one pulse output
- Digital input and output
- Communication via HART protocol
- Ex approval. The user can select the "i" or "e" type of protection for the output circuits; the type chosen will depend on the circuits which are connected. The type of protection can be changed even after installation has been completed. The digital outputs can be configured as NAMUR outputs by the user

Transmitter with digital signal processor (DSP)

The transmitter for the CoriolisMaster FCB330, FCB350, FCH330, FCH350 incorporates a digital signal processor (DSP) that enables high-precision mass flow and density measurements to be taken. The Coriolis sensor signals are immediately converted into digital data without any intermediate analog steps.

Excellent long-term stability and reliability together with fast signal processing are achieved with the new DSP transmitter.

Self-diagnostic functions for the flowmeter sensor and the transmitter, in combination with absolute zero stability, are benefits you can count on to ensure accurate measurements are taken.

The CoriolisMaster FCB330, FCB350, FCH330, FCH350 transmitter is particularly well suited for use in the following cases:

- Whenever mass flowrate is to be metered with maximum accuracy
- Whenever the density of the medium being measured is being determined
- Whenever the components of a recipe being mixed
- When metering non-conductive media or highly viscous, solid-loaded liquids, for example
- In batch filling processes

Installation instructions

Installation requirements/System sizing information

The CoriolisMaster FCB330, FCB350, FCH330, FCH350 is suitable for both indoor and outdoor installations. The standard device has an IP 67 enclosure. The flowmeter sensor is bidirectional and can be installed in any mounting position. It is important to ensure that the meter pipes are always completely filled with fluid. The material resistance of all wetted parts must be clarified.

The following points are to be considered during installation:

- The preferred flow direction is indicated by the arrow on the flowmeter sensor. Flow in this direction will be indicated as positive (a forward/reverse flow calibration is available as an option).
- The presence of gas bubbles in the meter tube increases the likelihood of erroneous measurements, particularly when measuring density. Therefore, the sensor should not be installed at the highest point in the system. Advantageous are installations in low pipeline sections, e.g., at the bottom of a U-section in the pipeline (invert).
- Long drop lines downstream of the flowmeter sensor should be avoided to prevent the meter tube from draining.
- Once the flowmeter has been installed, check that it is not subject to mechanical tension.
- Check that the flowmeter sensor does not come into contact with other objects. Do not attach the flowmeter sensor to the enclosure.
- Make sure that any gases dissolved in the medium do not outgas and that the meter tubes are always completely full. To safeguard this, a minimum back pressure of 0.2 bar (2.9 psi) is recommended.
- In case of gas measurements ensure that the gases are dry and do not contain liquids.
- Make sure that operation below the vapor pressure cannot occur when a vacuum exists in the meter tube or when liquids with a low boiling point are being processed.
- Do not install the flowmeter sensor in the vicinity of strong electromagnetic fields (e.g., pumps, motors, transformers, etc.).
- Make sure that there is no risk of cross talk between multiple flowmeter sensors. To prevent cross talk, the flowmeter sensors should be spaced distant from one other or the pipelines between them should be decoupled.

Supports

In order to support the weight of the flowmeter sensor and to ensure reliable measurements when adverse external effects exist (gas bubbles in the medium, for example), the flowmeter sensor should be installed in a rigid pipeline.
Two supports or hangers should be installed symmetrically and with zero tension in the direct vicinity of the process connections.

Shut-off devices

To conduct a system zero adjustment, shut-off devices are required in the pipeline:

- In horizontal installations at the outlet side
- In vertical installations at the inlet side

If possible, shut-off devices should be installed both upstream and downstream of the sensor.

Inlet sections

The flowmeter sensor does not require any inlet sections. Make sure that any valves, gates, sight glasses, etc., in the vicinity of the flowmeter sensor do not cavitate and are not set in vibration by the flowmeter sensor.

Model in remote mount design

Make sure that the flowmeter sensor and transmitter are assigned correctly. Compatible devices have the same end numbers, e. g., X001 and Y001 or X002 and Y002, on the name plate.

Pressure loss

Pressure loss is determined by the properties of the medium and the flow.
Documents to help you to calculate pressure loss can be downloaded from www.abb.com/flow.

Mounting positions

The flowmeter operates in any mounting position. The ideal installation position is vertical with flow from bottom to top.

IMPORTANT (NOTE)

EHEDG certification requires a self draining installation, only possible with a vertical installation.

Vertical installation in riser

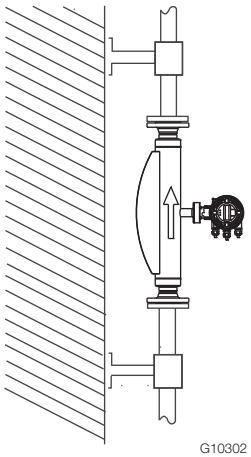

Fig. 1: Vertical installation, self-draining

Vertical installation in a drop line

Make sure that the flowmeter sensor is always completely full while measurements are being taken.
A pipeline reduction or an orifice must also be installed underneath the flowmeter sensor. The cross-section of the pipeline reduction or orifice must be smaller than the cross-section of the pipeline in order to prevent the flowmeter sensor from running dry while measurements are being taken.

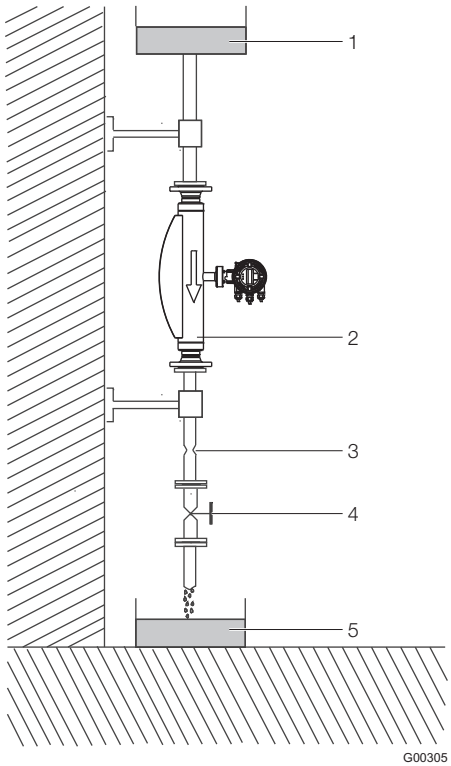

Fig. 2: Vertical installation in a drop line
1 Supply reservoir | 2 Flowmeter sensor | 3 Orifice or pipe constriction | 4 Valve | 5 Product reservoir

Horizontal installation in case of measurement of liquids

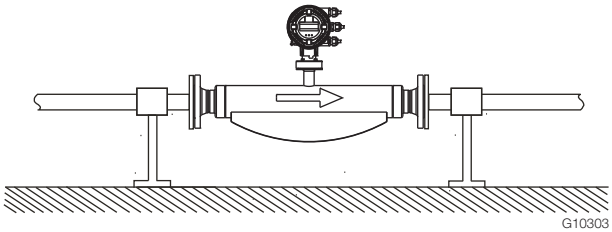

Fig. 3: Horizontal installation (liquids)

Horizontal installation in case of measurement of gases

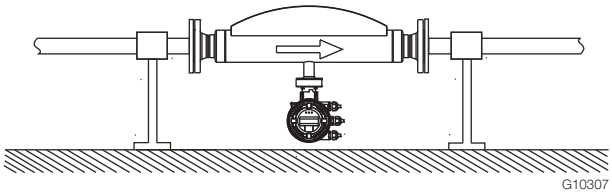

Abb. 4: Horizontal installation (gases)

In case of measurement of gases ensure that the transmitter housing or the terminal box pointing downwards.

Difficult installation locations for liquid measurement

The accumulation of air or gas bubbles in the meter tube will lead to increased inaccuracies.
Avoid the following installation locations in case of liquid measurement:

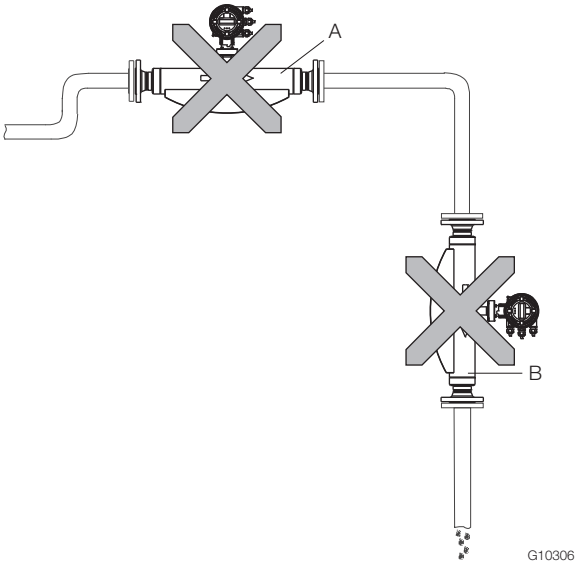

Fig. 5: Difficult installation locations

- **"A":** Installing the flowmeter sensor at the highest point of a pipeline leads to increased inaccuracies due to the accumulation of air or gas bubbles in the meter tube.
- **"B":** Installing the flowmeter sensor in a drop line means that there is no guarantee that the meter tube will be completely full while measurements are being taken and leads to increased inaccuracies.

Difficult installation locations and gas metering

When metering gas, the accumulation of fluid or the formation of condensate in the meter tube will lead to increased inaccuracies.
Avoid the following installation locations when metering gas:

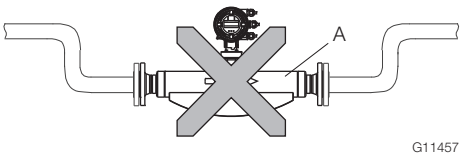

Fig. 6: Difficult installation locations

— **"A":** Installing the flowmeter sensor at the lowest point of a pipeline leads to increased inaccuracies due to the accumulation of fluid or the formation of condensate in the meter tube.

Installation in the vicinity of pumps

Strong vibrations in the pipeline must be damped using flexible damping devices.
The damping devices must be installed beyond the supported flowmeter section and outside of the section between the shut-off devices.
Do not connect flexible damping devices directly to the flowmeter sensor.

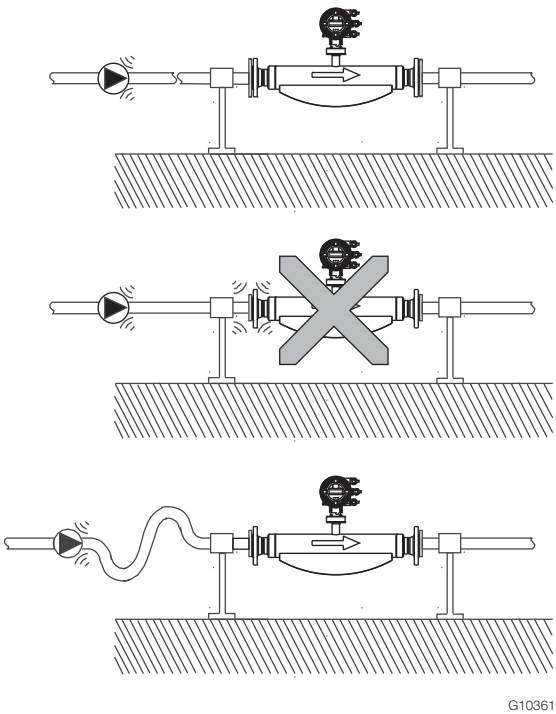

Fig. 7: Vibration damping

Zero balance

Before adjusting the zero under operating conditions, make sure that:

— The meter tube is completely full
— There are no gas bubbles or air in the meter tube (in case of liquid measurements)
— There are no condensates in the meter tube (in case of gas measurements)
— The pressure and temperature in the meter tube are appropriate for normal operating conditions

We recommend installing a bypass line to ensure that these conditions are met. Installing a bypass line means that adjustment can take place while the process is ongoing.

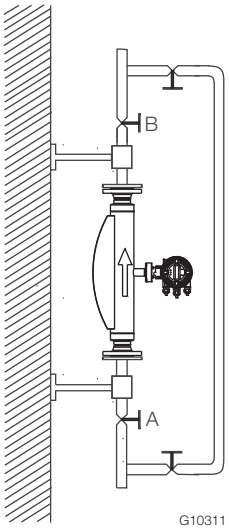

Fig. 8: Bypass line

Installation dependent on the temperature of the medium being measured

The mounting position of the flowmeter sensor is determined by the temperature of the medium being measured T_{medium}. Be aware of the following mounting options!

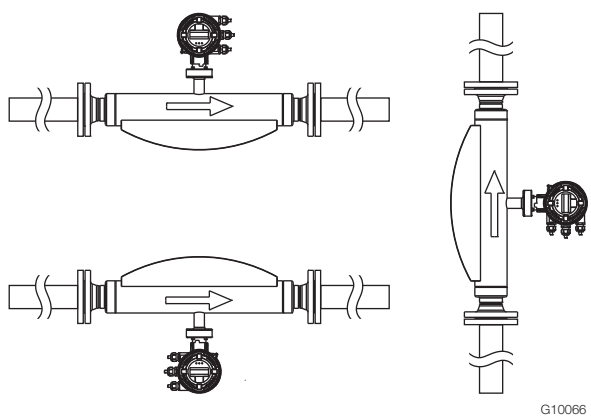

Fig. 9: Installation at T_{medium} -50°... 120 °C (-58 ... 248 °F)

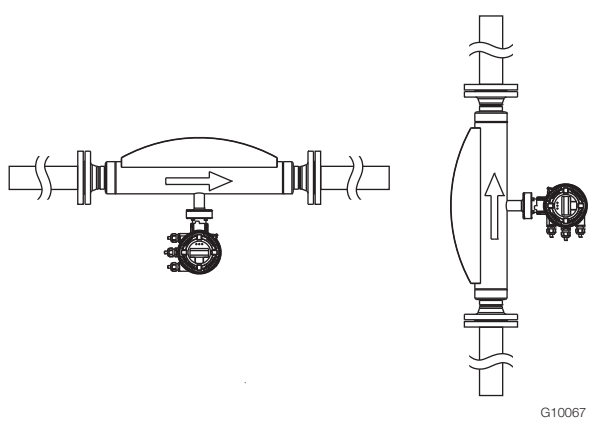

Fig. 10: Installation at T_{medium} -50°... 200 (-58 ... 392 °F)

Installation with option TE1 "extended tower length"

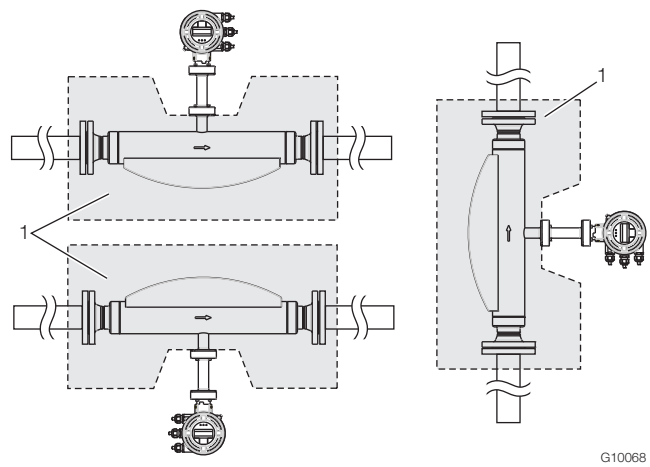

Fig. 11: Installation at T_{medium} -50°... 200 (-58 ... 392 °F)
1 Insulation

With option TE1 "extended tower length", the flowmeter sensor may be insulated as shown in Fig. 11.

Flowmeter sensor

Designs

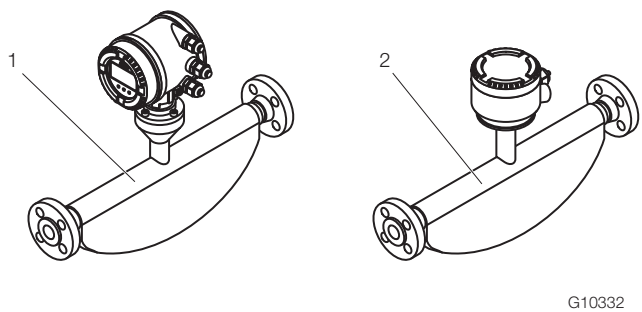

Fig. 12: FCB300 flowmeter sensor
1 Integral mount design |
2 Remote mount design (without transmitter)

Nominal diameter and measuring range

Nominal diameter	Q_{max} in kg/h (lb/h)
DN 15 (1/2“)	0 … 8,000 (0 … 17,637)
DN 25 (1“)	0 … 35,000 (0 … 77,162)
DN 50 (2“)	0 … 90,000 (0 … 198,416)
DN 80 (3“)	0 … 250,000 (0 … 551,156)
DN 100 (4“)	0 … 520,000 (0 … 1,146,404)
DN 150 (6“)	0 … 860,000 (0 … 1,895,975)

Recommended flow range

Fluids:
- The recommended flow range is 5 … 100 % of Q_{max}.
- Flows < 1 % of Q_{max} should be avoided.

Gases:
- The flow velocity of gases in the meter tube should not exceed 0.3 Mach (approx. 100 m/s (328 ft/s)).
- Flow velocities above 80m/s may lead to increased reproducibility values.
- The maximum flow range of gases is determined by the operating density. Dimensioning guidelines are available at www.abb.com/flow.

Measuring accuracy
Reference conditions

Calibration fluid	Water — Temperature: 25 °C (77 °F) ±5 K — Pressure: 2 … 4 bar (29 … 58 psi)
Ambient temperature	25 °C (77 °F) +10 K / -5 K
Power supply	Line voltage according to name plate U_N ±1 %
Warm-up phase	30 minutes
Installation	— Installation according to chapter titled “Installation instructions” and “Mounting positions” — No visible gas phase — No external mechanical or hydraulic disturbances, particularly cavitation
Output calibration	Pulse output
Effect of the analog output on measuring accuracy	As pulse output ±0.1 % of measurement

Measured error

The measured error is calculated as follows for the flow:

Scenario 1:
If

$$\text{Flow} \geq \frac{\text{Zero stability}}{(\text{base accuracy} / 100)}$$

Then:
- Maximum measured error:
  ± base accuracy as % of measured value
- Reproducibility:
  ± 1/2 x base accuracy as % of measured value

Scenario 2:
If

$$\text{Flow} < \frac{\text{Zero stability}}{(\text{base accuracy} / 100)}$$

Then:
- Maximum measured error:
  ± (zero stability / measured value) x 100 % of measured value
- Reproducibility:
  ± 1/2 x (zero stability / measured value) x 100% of measured value

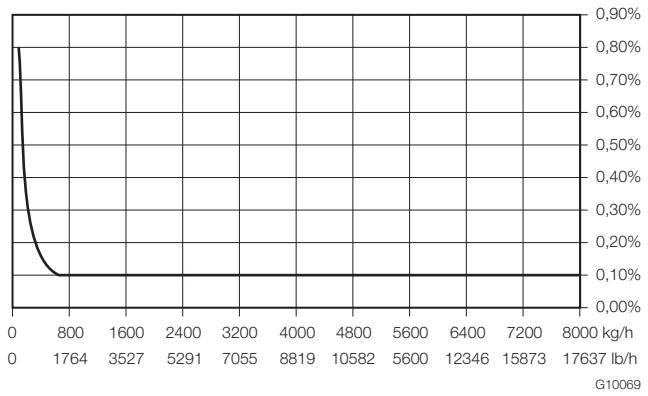

Fig. 13: Calculation of measured error FCB350 DN15 (example)

Measurement dynamic	Flow	Maximum measured error
100:1	80 kg/h (176.4 lb/h)	0.8 % o.r.
50:1	160 kg/h (352.7 lb/h)	0.4 % o.r.
10:1	800 kg/h (1763.7 lb/h)	0.1 % o.r.
2:1	4000 kg/h (8818.5 lb/h)	0.1 % o.r.
1:1	8000 kg/h (17637 lb/h)	0.1 % o.r.

Measured error and base accuracy for liquids

	FCx330	FCx350
Mass flow	± 0.4 % of rate ± 0.25 % of rate	± 0.15 % of rate ± 0.1 % of rate (option)
Volume flow	± 0.4 % of rate ± 0.25 % of rate	± 0.15 % of rate
Density	0.010 kg/l [1]	0.002 kg/l [1] 0.001 kg/l [2] 0.0005 kg/l (option) [3]
Reproducibility for density	0.002 kg/l	0.002 kg/l [1] 0.001 kg/l [2] 0.00025 kg/l (option) [3]
Temperature	1 K	0.5 K

1) For the density range from 0.5 … 1.8 kg/dm^3
2) As 1 and for the medium temperature range from -10 … 50 °C (14 … 122 °F)
3) As 2 and following field adjustment under operating conditions

Measured error and base accuracy for gases

	FCx330	FCx350
Mass flow	± 1 % of rate	± 0.5 % of rate
Temperature	1 K	0.5 K

Zero stability

Nominal diameter	kg/h (lb/h)
DN 15 (1/2“)	0.64 (1.41)
DN 25 (1“)	2.16 (4.76)
DN 50 (2“)	7.20 (15.87)
DN 80 (3“)	20 (44)
DN 100 (4“)	93.6 (206.35)
DN 150 (6“)	68.8 (151.68)

Effect of the temperature of the medium being measured

For the flow, less than ± 0.0015 % of Q_{max} / 1 K.
For the density, less than 0.0001 kg/dm^3 / 1 K.

Effect of the operating pressure

Nominal diameter	Flow [% of measurement / bar]	Density [kg/dm^3 / bar]
DN 15 (1/2“)	No effect	No effect
DN 25 (1“)	-0.013	No effect
DN 50 (2“)	-0.01	0.0004
DN 80 (3“)	-0.006	0.0005
DN 100 (4“)	-0.009	0.0006
DN 150 (6“)	-0.029	0.0008

Technical data

Pressure loss

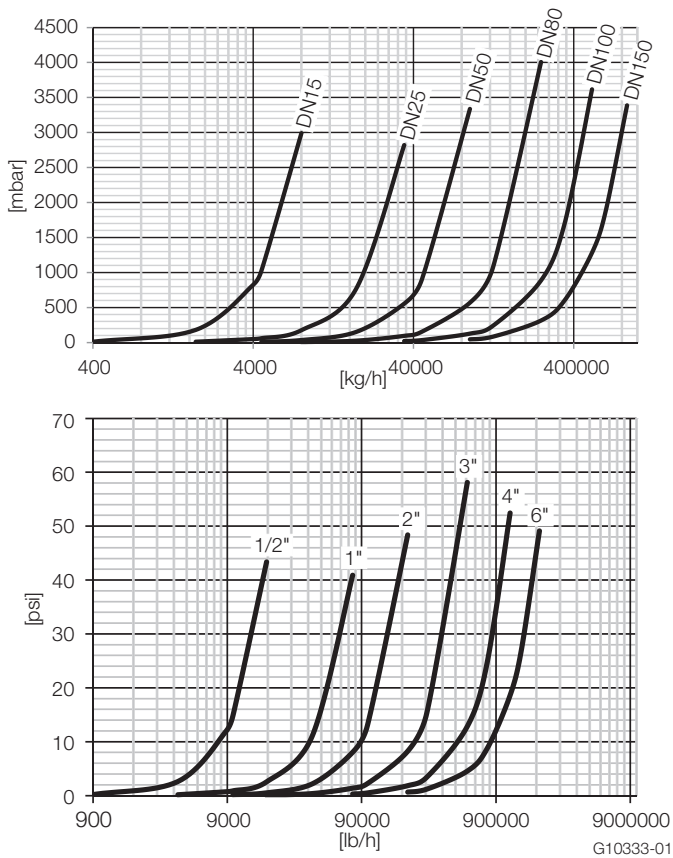

Fig. 14: Pressure loss curve (measured with water, viscosity: 1 mPas)

Viscosity range

Maximum dynamic viscosity:
≤ 1 Pas (1000 mPas = 1000 cP)

If you are working with higher viscosities, contact ABB.

Temperature limits °C (°F)

IMPORTANT (NOTE)
When using the device in hazardous areas, note the additional temperature data in the chapter titled "Technical data relevant to hazardous areas"!

Temperature range of the medium being measured
FCx350: -50 … 160 °C (-58 … 320 °F)
FCx350: -50 … 200 °C (-58 … 392 °F)

Ambient temperature range
Standard: -20 … 60 °C (-4 … 140 °F)
Optional: -40 … 60 °C (-40 … 140 °F)

Process connections

- Flange design according to EN / ASME
- Tri-Clamp according to DIN 32676 (ISO 2852)
- DN 15 … 100 (1/2 … 4“): Series 3
- BPE Tri-Clamp
- DN 15 … 100 (1/2 … 4“)

Pressure rating

PN 16, PN 40, PN 100
CL 150, CL 300, CL 600

The maximum permissible operating pressure is determined by the respective process connection, the temperature of the medium to be measured, the screws, and the gasket material.

Enclosure as protective device (optional)

Maximum 60 bar (870 psi)

Pressure Equipment Directive

Conformity assessment according to Category III, fluid group 1, gas
Check the corrosion resistance of the meter tube materials against the measuring medium.

Notes about EHEDG conformity

Bacteria and chemical substances can contaminate or pollute pipeline systems and the materials they are made of.
The appropriate installation conditions must be observed in order to achieve an installation that complies with EHEDG requirements.
In order to achieve compliance with EHEDG requirements, the combination of process connection and gaskets selected by the operator must consist solely of EHEDG-compliant parts.
Note the information in the latest version of the following document:
EHEDG Position Paper: "Hygienic process connections to use with hygienic components and equipment".

Materials for transmitters

Enclosure	
Varnished alloy casting	
Enclosure color	
— Mid-section:	RAL 7012
— Cover:	RAL 9002
Varnish layer thickness:	80 … 120 µm

Materials for flowmeter sensors

Wetted parts
Stainless steel
— 1.4404 (AISI 316L) or 1.4435 (AISI 316L)
Stainless steel, polished
— 1.4404 (AISI 316L) or 1.4435 (AISI 316L) certified to EHEDG with flowmeter sensor material (AISI 316L)
— Hastelloy C4 (2.4610)
— Optional: Hastelloy C22 (2.4602) or Hastelloy C276 (2.4819)
Optional: Manufacture in accordance with NACE MR0175 and MR0103 (ISO 15156)

Enclosure
Stainless steel 1.4404 (AISI 316L), 1.4301 (AISI 304), 1.4308 (ASTM CF8)

Material load for process connections

Design	Nominal diameter	PS_{max}	TS_{max}	TS_{min}
Threaded pipe connection (DIN 11851)	DN 15 … 40 (1/2 … 1 1/2“)	40 bar (580 psi)	140 °C (284 °F)	-40 °C (-40 °F)
	DN 50 … 100 (2 … 4“)	25 bar (363 psi)	140 °C (284 °F)	-40 °C (-40 °F)
Tri-Clamp (DIN 32676)	DN 15 … 50 (1/2 … 2“)	16 bar (232 psi)	120 °C (248 °F)	-40 °C (-40 °F)
	DN 65 … 100 (2 1/2 … 4“)	10 bar (145 psi)	120 °C (248 °F)	-40 °C (-40 °F)

Material load curves for flange devices

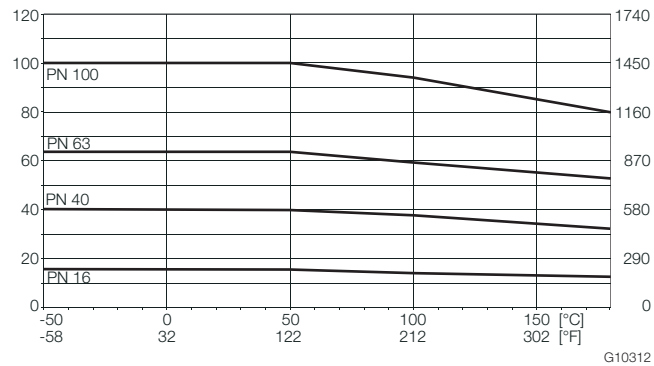

Fig. 15: Stainless steel DIN flange 1.4571 / 1.4404 (316Ti / 316L) up to DN 150 (6“)

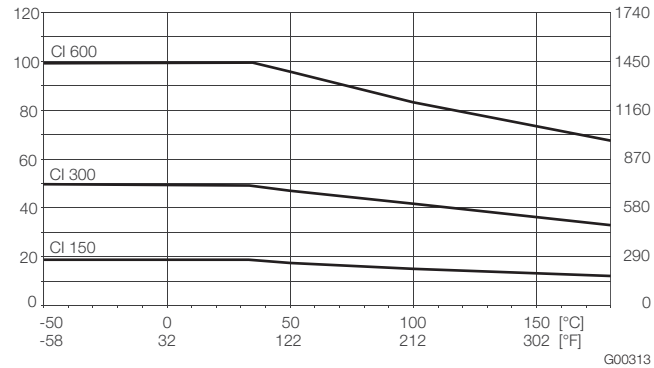

Fig. 16: Stainless steel ASME flange 1.4571 / 1.4404 (316Ti / 316L) up to DN 150 (6“)

Dimensions

Integral mount design

Flange design acc. to EN / ASME

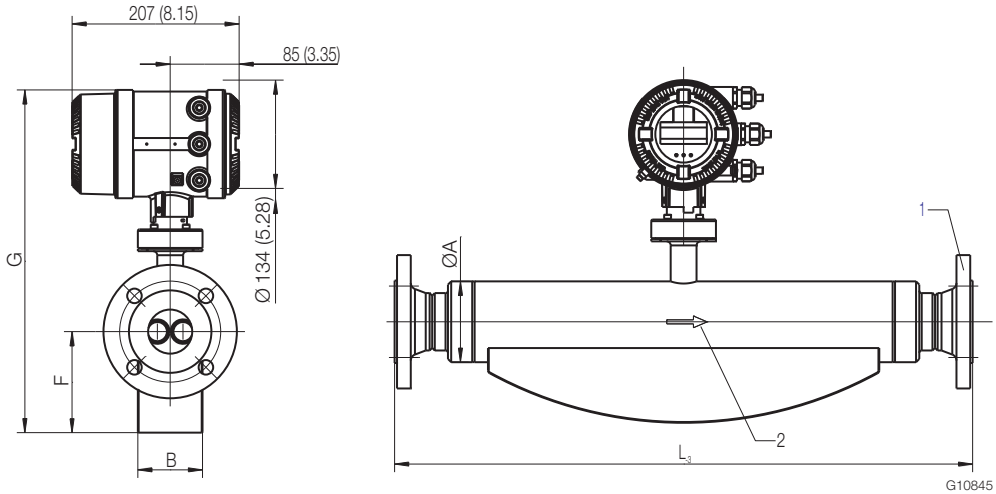

Flange design acc. to EN / ASME, option TE1, "extended tower length"

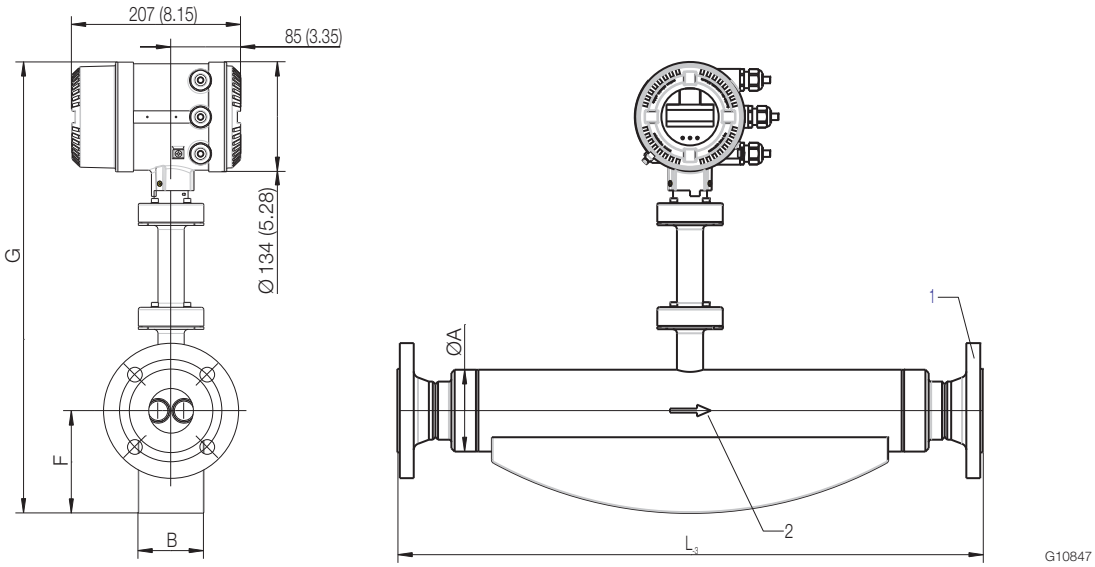

Fig. 17: Dimensions in mm (inch)
1 Flange acc. to EN 1092, ASME B16.5, ISO 7005 (connection dimensions for ASME flanges acc. to ASME B16.5 (ANSI)) | 2 Flow direction

Sensors with stainless steel wetted parts

Dimensions acc. to EN 1092-1										
Meter size	Process connection	L mm (inch) EN 1092-1				G mm (inch)	F mm (inch)	B mm (inch)	A mm (inch)	Weight kg (lb)
		PN 16	PN 40	PN 63	PN 100					
DN 15 (1/2“)	DN 10 (1/4“)	—[2]	385 (15.16)	—[2]	—[2]	350 / 477[1] (13.78 / 18.78[1])	77 (3.03)	46 (1.81)	45 (1.77)	11 (24.25)
	DN 15 (1/2“)		385 (15.16)	403 (15.87)	403 (15.87)					
	DN 20 (3/4“)		421 (16.57)	—[2]	—[2]					
DN 25 (1“)	DN 20 (3/4“)	—[2]	576 (22.68)	—[2]	—[2]	387 / 514[1] (15.24 / 16.34[1])	103 (4.06)	62 (2.44)	70 (2.76)	13 (18.66)
	DN 25 (1“)		525 (20.67)	564 (22.20)	564 (22.20)					
	DN 40 (1 1/2“)		576 (22.68)	572 (22.52)	572 (22.52)					
DN 50 (2“)	DN 40 (1 1/2“)	—[2]	763 (30.04)	745 (29.33)	745 (29.33)	424 / 551[1] (16.69 / 21.69[1])	125 (4.92)	80 (3.15)	100 (3.94)	29 (63.93)
	DN 50 (2“)		715 (28.15)	745 (29.33)	757 (29.80)					
	DN 65 (2 1/2“)		763 (30.33)	—[2]	—[2]					
DN 80 (3“)	DN 65 (2 1/2“)	—[2]	—[2]	910 (35.83)	910 (35.83)	502 / 629[1] (19.76 / 24.76[1])	183 (7.20)	123 (4.84)	155 (6.10)	70 (155)
	DN 80 (3“)	870 (34.25)	870 (34.25)	910 (35.83)	910 (35.83)					
	DN 100 (4“)	—[2]	—[2]	1060 (41.73)	1080 (42.52)					
DN 100 (4“)	DN 80 (3“)	—[2]	—[2]	—[2]	—[2]	606 / 733[1] (23.86 / 28.86[1])	260 (10.24)	163 (6.42)	195 (7.68)	110 (243)
	DN 100 (4“)	1122 (44.17)	1144 (45.04)	—[2]	—[2]					
	DN 150 (6“)	—[2]	—[2]	—[2]	—[2]					
DN 150 (6“)	DN100 (4“)	—[2]	—[2]	—[2]	—[2]	821 / 948[1] (32.32 / 37.32[1])	320 (12.60)	205 (8.07)	260 (10.24)	230 (508)
	DN150 (6“)	1421 (55.94)	1461 (57.52)	—[2]	—[2]					
	DN200 (8“)	—[2]	—[2]	—[2]	—[2]					

1) Dimension G, option TE1 "extended tower length"
2) On request

CoriolisMaster FCB330, FCB350, FCH330, FCH350
Coriolis Mass Flowmeter

Dimensions acc. to ASME B16.5 (ANSI)											
Meter size	Process connection	L mm (inch)					G mm (inch)	F mm (inch)	B mm (inch)	A mm (inch)	Weight kg (lb)
		ASME CL									
		150	300	600	900[2]	1500[2]					
DN 15 (1/2“)	DN 10 (1/4“)	—[3]	—[3]	—[3]	—[3]	—[3]	350 / 477[1] (13.78 / 18.78[1])	77 (3.03)	46 (1.81)	45 (1.77)	11 (24.25)
	DN 15 (1/2“)	435 (17.13)	421 (16.57)	421 (16.57)	421 (16.57)	421 (16.57)					
	DN 20 (3/4“)	—[3]	—[3]	—[3]	—[3]	—[3]					
DN 25 (1“)	DN 20 (3/4“)	575 (22.64)	—[3]	—[3]	—[3]	—[3]	387 / 514[1] (15.24 / 16.34[1])	103 (4.06)	62 (2.44)	70 (2.76)	13 (18.66)
	DN 25 (1“)	575 (22.64)	575 (22.64)	575 (22.64)	575 (22.64)	575 (22.64)					
	DN 40 (1 1/2“)	576 (22.68)	576 (22.68)	576 (22.68)	—[3]	—[3]					
DN 50 (2“)	DN 40 (1 1/2“)	763 (30.04)	756 (29.76)	756 (29.76)	—[3]	—[3]	424 / 551[1] (16.69 / 21.69[1])	125 (4.92)	80 (3.15)	100 (3.94)	29 (63.93)
	DN 50 (2“)	715 (28.15)	763 (30.04)	773 (30.43)	—[3]	—[3]					
	DN 65 (2 1/2“)	763 (30.04)	—[3]	—[3]	—[3]	—[3]					
DN 80 (3“)	DN 65 (2 1/2“)	905 (35.63)	920 (36.22)	920 (36.22)	965 (37.99)	965 (37.99)	502 / 629[1] (19.76 / 24.76[1])	183 (7.20)	123 (4.84)	155 (6.10)	70 (155)
	DN 80 (3“)	880 (34.65)	895 (35.24)	920 (36.22)	1100 (43.31)	1130 (44.49)					
	DN 100 (4“)	960 (37.80)	1075 (42.32)	1100 (43.31)	1130 (44.49)	1150 (45.28)					
DN 100 (4“)	DN 80 (3“)	—[3]	—[3]	—[3]	—[3]	—[3]	606 / 733 (23.86 / 28.86[1])	260 (10.24)	163 (6.42)	195 (7.68)	110 (243)
	DN 100 (4“)	1144 (45.04)	1324 (52.13)	1345 (52.95)	—[3]	—[3]					
	DN 150 (6“)	—[3]	—[3]	—[3]	—[3]	—[3]					
DN 150 (6“)	DN100 (4“)	—[3]	—[3]	—[3]	—[3]	—[3]	821 / 948[1] (32.32 / 37.32[1])	320 (12.60)	205 (8.07)	260 (10.24)	230 (508)
	DN150 (6“)	1485 (58.46)	1505 (59.25)	1555 (61.22)	—[3]	—[3]					
	DN200 (8“)	—[3]	—[3]	—[3]	—[3]	—[3]					

Dimensions acc. to Tri-Clamp BPE, Tri-Clamp DIN 3276, Thread DIN 11851										
Meter size	Process connection	L mm (inch)				G mm (inch)	F mm (inch)	B mm (inch)	A mm (inch)	Weight kg (lb)
		Tri-Clamp		Thread						
		BPE	DIN 3276	DIN 11851						
		PN 8 / 10	PN 16	PN 40	PN 25					
DN 15 (1/2“)	DN 10 (1/4“)	—[3]	410 (16.14)	413 (16.26)	—[3]	350 / 477[1] (13.78 / 18.78[1])	77 (3.03)	46 (1.81)	45 (1.77)	11 (24.25)
	DN 15 (1/2“)	433 (17.05)	410 (16.14)	413 (16.26)	—[3]					
	DN 20 (3/4“)	—[3]	410 (16.14)	413 (16.26)	—[3]					
DN 25 (1“)	DN 20 (3/4“)	—[3]	590 (23.23)	590 (23.23)	—[3]	387 / 514[1] (15.24 / 16.34[1])	103 (4.06)	62 (2.44)	70 (2.76)	13 (18.66)
	DN 25 (1“)	590 (23.23)	590 (23.23)	590 (23.23)	—[3]					
	DN 40 (1 1/2“)	—[3]	590 (23.23)	590 (23.23)	—[3]					
DN 50 (2“)	DN 40 (1 1/2“)	—[3]	763 (30.04)	763 (30.04)	—[3]	424 / 551[1] (16.69 / 21.69[1])	125 (4.92)	80 (3.15)	100 (3.94)	29 (63.93)
	DN 50 (2“)	740 (29.13)	740 (29.13)	—[3]	740 (29.13)					
	DN 65 (2 1/2“)	—[3]	740 (29.13)	—[3]	740 (29.13)					
DN 80 (3“)	DN 65 (2 1/2“)	950 (37.40)	950 (37.40)	—[3]	990 (38.98)	502 / 629[1] (19.76 / 24.76[1])	183 (7.20)	123 (4.84)	155 (6.10)	70 (155)
	DN 80 (3“)	910 (35.83)	910 (35.83)	—[3]	940 (37.01)					
	DN 100 (4“)	910 (35.83)	910 (35.83)	—[3]	940 (37.01)					

1) Dimension G, option TE1 "extended tower length"
2) Please apply Cl600 p-t-ratings for above Cl900 and Cl1500 flanges
3) On request

Sensors with Hastelloy C4, C22 or C276 wetted parts

Dimensions acc. to EN 1092-1 and ASME B16.5 (ANSI)											
Meter size	Process connection	L mm (inch)					G mm (inch)	F mm (inch)	B mm (inch)	A mm (inch)	Weight kg (lb)
		EN 1092-1		ASME CL							
		PN40	PN100	600	900[2]	1500[2]					
DN 15 (1/2“)	DN 10 (1/4“)	—[2]	—[2]	—[2]	—[2]	—[2]	350 / 477[1] (13.78 / 18.78[1])	77 (3.03)	46 (1.81)	45 (1.77)	11 (24.25)
	DN 15 (1/2“)	442 (17.4)	442 (17.4)	442 (17.4)	442 (17.4)	442 (17.4)					
	DN 20 (3/4“)	—[2]	—[2]	—[2]	—[2]	—[2]					
DN 25 (1“)	DN 20 (3/4“)	—[2]	—[2]	—[2]	—[2]	—[2]	387 / 514[1] (15.24 / 16.34[1])	103 (4.06)	62 (2.44)	70 (2.76)	13 (18.66)
	DN 25 (1“)	607 (23.9)	607 (23.9)	607 (23.9)	607 (23.9)	607 (23.9)					
	DN 40 (1 1/2“)	—[2]	—[2]	—[2]	—[2]	—[2]					
DN 50 (2“)	DN 40 (1 1/2“)	—[2]	—[2]	—[2]	—[2]	—[2]	424 / 551[1] (16.69 / 21.69[1])	125 (4.92)	80 (3.15)	100 (3.94)	29 (63.93)
	DN 50 (2“)	762 (30.0)	762 (30.0)	762 (30.0)	762 (30.0)	762 (30.0)					
	DN 65 (2 1/2“)	—[2]	—[2]	—[2]	—[2]	—[2]					
DN 80 (3“)	DN 65 (2 1/2“)	—[2]	—[2]	—[2]	—[2]	—[2]	—[2]	—[2]	—[2]	—[2]	—[2]
	DN 80 (3“)										
	DN 100 (4“)										
DN 100 (4“)	DN 80 (3“)						—[2]	—[2]	—[2]	—[2]	—[2]
	DN 100 (4“)										
	DN 150 (6“)										
DN 150 (6“)	DN100 (4“)						—[2]	—[2]	—[2]	—[2]	—[2]
	DN150 (6“)										
	DN200 (8“)										

1) Dimension G, option TE1 "extended tower length"
2) On request

Remote mount design

Flange design acc. to EN / ASME

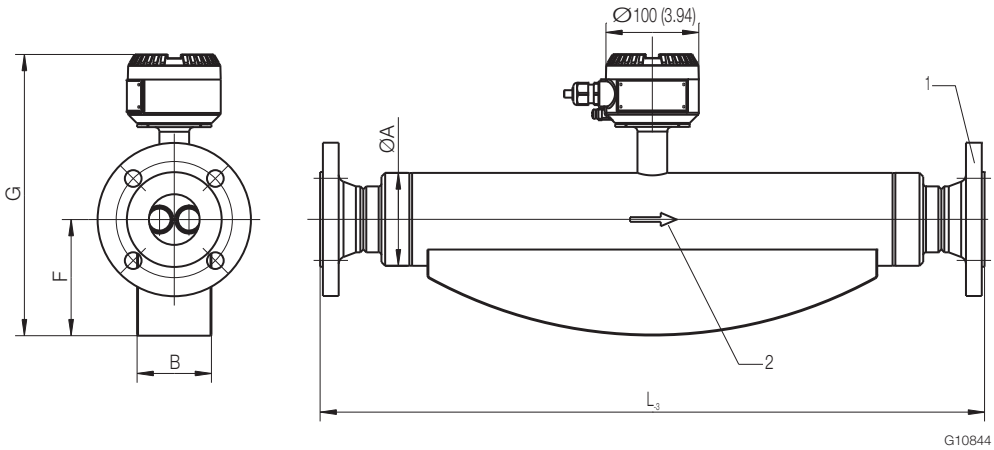

Flange design acc. to EN / ASME, option TE1, "extended tower length"

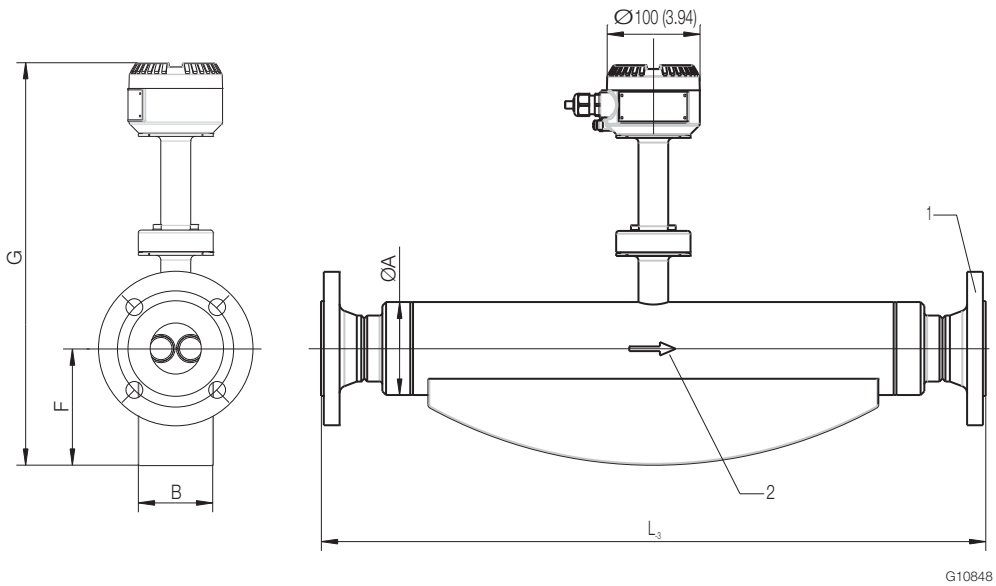

Fig. 18: Dimensions in mm (inch)
1 Flange acc. to EN 1092, ASME B16.5, ISO 7005 (connection dimensions for ASME flanges acc. to ASME B16.5 (ANSI)) | 2 Flow direction

Sensors with stainless steel wetted parts

Dimensions acc. to EN 1092-1										
Meter size	Process connection	L mm (inch) EN 1092-1				G mm (inch)	F mm (inch)	B mm (inch)	A mm (inch)	Weight kg (lb)
		PN 16	PN 40	PN 63	PN 100					
DN 15 (1/2“)	DN 10 (1/4“)	—[2]	385 (15.16)	—[2]	—[2]	227 / 354[1] (8.94 / 13.94[1])	77 (3.03)	46 (1.81)	45 (1.77)	11 (24.25)
	DN 15 (1/2“)		385 (15.16)	403 (15.87)	403 (15.87)					
	DN 20 (3/4“)		421 (16.57)	—[2]	—[2]					
DN 25 (1“)	DN 20 (3/4“)	—[2]	576 (22.68)	—[2]	—[2]	266 / 393[1] (10.5 / 15.47[1])	103 (4.06)	62 (2.44)	70 (2.76)	13 (18.66)
	DN 25 (1“)		525 (20.67)	564 (22.20)	564 (22.20)					
	DN 40 (1 1/2“)		576 (22.68)	572 (22.52)	572 (22.52)					
DN 50 (2“)	DN 40 (1 1/2“)	—[2]	763 (30.04)	745 (29.33)	745 (29.33)	303 / 430[1] (11.9 / 16.93[1])	125 (4.92)	80 (3.15)	100 (3.94)	29 (63.93)
	DN 50 (2“)		715 (28.15)	745 (29.33)	757 (29.80)					
	DN 65 (2 1/2“)		763 (30.33)	—[2]	—[2]					
DN 80 (3“)	DN 65 (2 1/2“)	—[2]	—[2]	910 (35.83)	910 (35.83)	381 / 508[1] (15.0 / 20.0[1])	183 (7.20)	123 (4.84)	155 (6.10)	70 (155)
	DN 80 (3“)	870 (34.25)	870 (34.25)	910 (35.83)	910 (35.83)					
	DN 100 (4“)	—[2]	—[2]	1060 (41.73)	1080 (42.52)					
DN 100 (4“)	DN 80 (3“)	—[2]	—[2]	—[2]	—[2]	485 / 612[1] (19.1 / 24.1[1])	260 (10.24)	163 (6.42)	195 (7.68)	110 (243)
	DN 100 (4“)	1122 (44.17)	1144 (45.04)	—[2]	—[2]					
	DN 150 (6“)	—[2]	—[2]	—[2]	—[2]					
DN 150 (6“)	DN100 (4“)	—[2]	—[2]	—[2]	—[2]	700 / 827[1] (27.56 / 32.56[1])	205 (8.07)	260 (10.24)	230 (508)	320 (12.60)
	DN150 (6“)	1421 (55.94)	1461 (57.52)	—[2]	—[2]					
	DN200 (8“)	—[2]	—[2]	—[2]	—[2]					

1) Dimension G, option TE1 "extended tower length"
2) On Request

CoriolisMaster FCB330, FCB350, FCH330, FCH350
Coriolis Mass Flowmeter

Dimensions acc. to ASME B16.5 (ANSI)											
Meter size	Process connection	L mm (inch)					G mm (inch)	F mm (inch)	B mm (inch)	A mm (inch)	Weight kg (lb)
		ASME CL									
		150	300	600	900[2]	1500[2]					
DN 15 (1/2“)	DN 10 (1/4“)	—[3]	—[3]	—[3]	—[3]	—[3]	227 / 354[1] (8.94 / 13.94[1])	77 (3.03)	46 (1.81)	45 (1.77)	11 (24.25)
	DN 15 (1/2“)	435 (17.13)	421 (16.57)	421 (16.57)	421 (16.57)	421 (16.57)					
	DN 20 (3/4“)	—[3]	—[3]	—[3]	—[3]	—[3]					
DN 25 (1“)	DN 20 (3/4“)	575 (22.64)	—[3]	—[3]	—[3]	—[3]	266 / 393[1] (10.5 / 15.47[1])	103 (4.06)	62 (2.44)	70 (2.76)	13 (18.66)
	DN 25 (1“)	575 (22.64)	575 (22.64)	575 (22.64)	575 (22.64)	575 (22.64)					
	DN 40 (1 1/2“)	576 (22.68)	576 (22.68)	576 (22.68)	—[3]	—[3]					
DN 50 (2“)	DN 40 (1 1/2“)	763 (30.04)	756 (29.76)	756 (29.76)	—[3]	—[3]	303 / 430[1] (11.9 / 16.93[1])	125 (4.92)	80 (3.15)	100 (3.94)	29 (63.93)
	DN 50 (2“)	715 (28.15)	763 (30.04)	773 (30.43)	—[3]	—[3]					
	DN 65 (2 1/2“)	763 (30.04)	—[3]	—[3]	—[3]	—[3]					
DN 80 (3“)	DN 65 (2 1/2“)	905 (35.63)	920 (36.22)	920 (36.22)	965 (37.99)	965 (37.99)	381 / 508[1] (15.0 / 20.0[1])	183 (7.20)	123 (4.84)	155 (6.10)	70 (155)
	DN 80 (3“)	880 (34.65)	895 (35.24)	920 (36.22)	1100 (43.31)	1130 (44.49)					
	DN 100 (4“)	960 (37.80)	1075 (42.32)	1100 (43.31)	1130 (44.49)	1150 (45.28)					
DN 100 (4“)	DN 80 (3“)	—[3]	—[3]	—[3]	—[3]	—[3]	485 / 612[1] (19.1 / 24.1[1])	260 (10.24)	163 (6.42)	195 (7.68)	110 (243)
	DN 100 (4“)	1144 (45.04)	1324 (52.13)	1345 (52.95)	—[3]	—[3]					
	DN 150 (6“)	—[3]	—[3]	—[3]	—[3]	—[3]					
DN 150 (6“)	DN100 (4“)	—[3]	—[3]	—[3]	—[3]	—[3]	700 / 827[1] (27.56 / 32.56[1])	320 (12.60)	205 (8.07)	260 (10.24)	230 (508)
	DN150 (6“)	1485 (58.46)	1505 (59.25)	1555 (61.22)	—[3]	—[3]					
	DN200 (8“)	—[3]	—[3]	—[3]	—[3]	—[3]					

Dimensions acc. to Tri-Clamp BPE, Tri-Clamp DIN 3276, thread DIN 11851										
Meter size	Process connection	L mm (inch)				G mm (inch)	F mm (inch)	B mm (inch)	A mm (inch)	Weight kg (lb)
		Tri-Clamp		Thread						
		BPE	DIN 3276	DIN 11851						
		PN 8 / 10	PN 16	PN 40	PN 25					
DN 15 (1/2“)	DN 10 (1/4“)	—[3]	410 (16.14)	413 (16.26)	—[3]	227 / 354[1] (8.94 / 13.94[1])	77 (3.03)	46 (1.81)	45 (1.77)	11 (24.25)
	DN 15 (1/2“)	433 (17.05)	410 (16.14)	413 (16.26)	—[3]					
	DN 20 (3/4“)	—[3]	410 (16.14)	413 (16.26)	—[3]					
DN 25 (1“)	DN 20 (3/4“)	—[3]	590 (23.23)	590 (23.23)	—[3]	266 / 393[1] (10.5 / 15.47[1])	103 (4.06)	62 (2.44)	70 (2.76)	13 (18.66)
	DN 25 (1“)	590 (23.23)	590 (23.23)	590 (23.23)	—[3]					
	DN 40 (1 1/2“)	—[3]	590 (23.23)	590 (23.23)	—[3]					
DN 50 (2“)	DN 40 (1 1/2“)	—[3]	763 (30.04)	763 (30.04)	—[3]	303 / 430[1] (11.9 / 16.93[1])	125 (4.92)	80 (3.15)	100 (3.94)	29 (63.93)
	DN 50 (2“)	740 (29.13)	740 (29.13)	—[3]	740 (29.13)					
	DN 65 (2 1/2“)	—[3]	740 (29.13)	—[3]	740 (29.13)					
DN 80 (3“)	DN 65 (2 1/2“)	950 (37.40)	950 (37.40)	—[3]	990 (38.98)	381 / 508[1] (15.0 / 20.0[1])	183 (7.20)	123 (4.84)	155 (6.10)	70 (155)
	DN 80 (3“)	910 (35.83)	910 (35.83)	—[3]	940 (37.01)					
	DN 100 (4“)	910 (35.83)	910 (35.83)	—[3]	940 (37.01)					

1) Dimension G, option TE1 "extended tower length"
2) Please apply Cl600 p-t-ratings for above Cl900 and Cl1500 flanges
3) On request

Sensors with Hastelloy C4, C22 or C276 wetted parts

Dimensions acc. to EN 1092-1 and ASME B16.5 (ANSI)											
Meter size	Process connection	L mm (inch)					G mm (inch)	F mm (inch)	B mm (inch)	A mm (inch)	Weight kg (lb)
		EN 1092-1		ASME CL							
		PN40	PN100	600	900[2]	1500[2]					
DN 15 (1/2“)	DN 10 (1/4“)	—[2]	—[2]	—[2]	—[2]	—[2]	227 / 354[1] (8.94 / 13.94[1])	77 (3.03)	46 (1.81)	45 (1.77)	11 (24.25)
	DN 15 (1/2“)	442 (17.4)	442 (17.4)	442 (17.4)	442 (17.4)	442 (17.4)					
	DN 20 (3/4“)	—[2]	—[2]	—[2]	—[2]	—[2]					
DN 25 (1“)	DN 20 (3/4“)	—[2]	—[2]	—[2]	—[2]	—[2]	266 / 393[1] (10.5 / 15.47[1])	103 (4.06)	62 (2.44)	70 (2.76)	13 (18.66)
	DN 25 (1“)	607 (23.9)	607 (23.9)	607 (23.9)	607 (23.9)	607 (23.9)					
	DN 40 (1 1/2“)	—[2]	—[2]	—[2]	—[2]	—[2]					
DN 50 (2“)	DN 40 (1 1/2“)	—[2]	—[2]	—[2]	—[2]	—[2]	303 / 430[1] (11.9 / 16.93[1])	125 (4.92)	80 (3.15)	100 (3.94)	29 (63.93)
	DN 50 (2“)	762 (30.0)	762 (30.0)	762 (30.0)	762 (30.0)	762 (30.0)					
	DN 65 (2 1/2“)	—[2]	—[2]	—[2]	—[2]	—[2]					
DN 80 (3“)	DN 65 (2 1/2“)	—[2]	—[2]	—[2]	—[2]	—[2]	—[2]	—[2]	—[2]	—[2]	—[2]
	DN 80 (3“)										
	DN 100 (4“)										
DN 100 (4“)	DN 80 (3“)						—[2]	—[2]	—[2]	—[2]	—[2]
	DN 100 (4“)										
	DN 150 (6“)										
DN 150 (6“)	DN100 (4“)						—[2]	—[2]	—[2]	—[2]	—[2]
	DN150 (6“)										
	DN200 (8“)										

1) Dimension G, option TE1 "extended tower length"
2) On request

Transmitter

Technical data

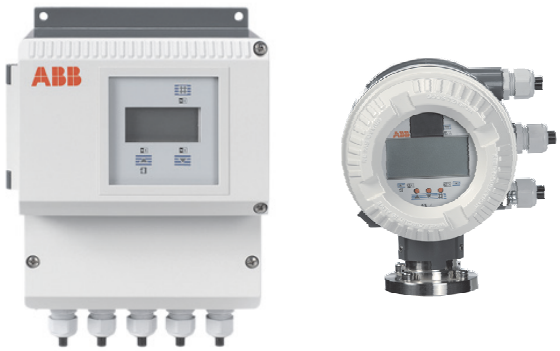

G10320

Fig. 19: FCB300 transmitter in field enclosure

Measuring range
The measuring range can be set at will between 0.01 … 1 Qmax.

Degree of protection
IP 65 / IP 67, NEMA 4X

Electrical connections
Cable gland M20 x 1.5 or 1/2" NPT
The maximum signal cable length for the remote mount design is 10 m (33 ft) (longer lengths on request).

Power supply

Supply voltage	100 … 230 V AC, 47 … 63 Hz (tolerance -15 % / +10 %)
	20.4 … 26.4 V AC, 47 … 63 Hz
	20.4 … 31.2 V DC (ripple: ≤ 5 %)
Power consumption	S ≤ 25 VA

Response time
As step function 0 … 99 % (corr. to 5 τ) ≥ 1 s

Ambient temperature
Standard: -20 … 60 °C (-4 … 140 °F)
Optional: -40 … 60 °C (-40 … 140 °F)

At operation below -20 °C (-4 °F), the LCD can no longer be read and the electronic unit should be operated with as few vibrations as possible.
Full functionality is assured at temperatures above -20 °C (-4 °F).

Housing design

Enclosure	
Varnished alloy casting	
Enclosure color	
— Mid-section:	RAL 7012
— Cover:	RAL 9002
Varnish layer thickness:	80 … 120 µm

Forward/reverse flow metering
The flow direction is indicated by the arrows on the transmitter LCD and via the digital switching output (if configured).

LCD display
LCD, 2 lines, backlit
Both lines of the LCD are freely configurable.
The following values can be displayed:
- Mass flow
- Volume flow
- Density or temperature
- Flow count, 7-digit with overflow counter and specification of physical unit for mass or volume.

On integral mount design devices, the transmitter enclosure can be rotated through approx. 180° in any direction. The LCD can be rotated to four positions to ensure optimum readability.

Operation

Three buttons on the transmitter are used to operated the device and enter parameters. Alternatively, if the enclosure cover on the transmitter is closed, operators can use a magnetic pen.

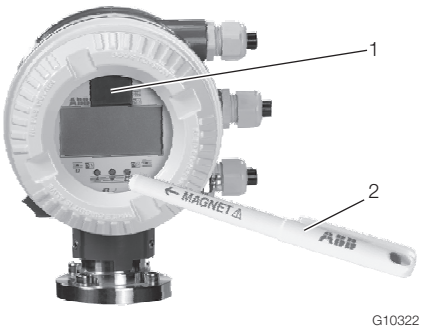

Fig. 20: Operation with magnetic pen
1 FRAM (plug-in) | 2 Magnetic pen

Data backup

Data is backed up to an FRAM integrated in the transmitter. Data is saved for a period of 10 years without power supply. Hardware and software are identified according to NAMUR recommendation NE53.

IMPORTANT (NOTE)

The device meets the requirements of the EMC directive 2004/108/EC (EN 61326) and the low-voltage directive 2006/95/EC (EN 61010-1).

DensiMass concentration measurement (FCB350 only)

The transmitter can calculate the current concentration from the measured density and temperature using concentration matrices.
The following concentration matrices are preconfigured in the transmitter as standard:

- Concentration of sodium hydroxide in water
- Concentration of alcohol in water
- Concentration of sugar in water
- Concentration of corn starch in water
- Concentration of wheat starch in water

The user can enter two more user-defined matrices containing up to 100 values.

Accuracy of concentration measurement

The accuracy of the concentration measurement is determined in the first instance by the quality of the matrix data entered. However, as the calculation is based on temperature and density (the input variables), the accuracy of the concentration measurement is ultimately determined by the measuring accuracy of temperature and density.

Example:
Density of 0 % alcohol in water at 20 °C (68 °F): 998.23 g/l
Density of 100 % alcohol in water at 20 °C (68 °F): 789.30 g/l

Concentration	Density
100 %	208.93 g/l
0.48 %	1 g/l
0.69 %	2 g/l

The accuracy class of the density measurement thus directly determines the accuracy of the concentration measurement. See the device operating instructions for detailed information.

Electrical data

Current outputs

Current output 1, active	
Output signal	Active, 0 … 20 mA or 4 … 20 mA switchable
Load	$0\ \Omega \leq R_B \leq 560\ \Omega$
Measurement uncertainty	< 0.1 % of measured value
Terminals	31 / 32
Measured values	Mass flow, volume flow, density, and temperature (freely configurable via software)

Current output 1, passive	
Output signal	4 ... 20 mA passive
Load	$0\ \Omega \leq R_B \leq 600\ \Omega$
Source voltage	$12\ V \leq U_q \leq 30\ V$
Measurement uncertainty	< 0.1 % of measured value
Terminals	31 / 32
Measured values	Mass flow, volume flow, density, and temperature (freely configurable via software)

Current output 2, passive	
Output signal	4 ... 20 mA passive
Load	$0\ \Omega \leq R_B \leq 600\ \Omega$
Source voltage	$12\ V \leq U_q \leq 30\ V$
Measurement uncertainty	< 0.1 % of measured value
Terminals	33 / 34
Measured values	Mass flow, volume flow, density, and temperature (freely configurable via software)

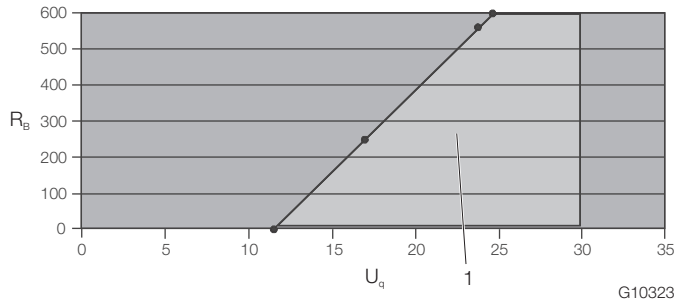

Fig. 21: Permissible source voltage as a function of load resistance, where I_{max} = 22 mA

1 Permissible range

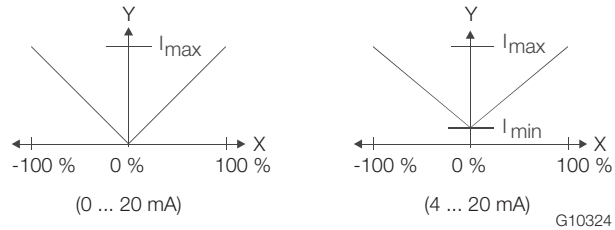

Fig. 22

IMPORTANT (NOTE)

Failure information according to NAMUR recommendation NE43.

Pulse output

Scaled pulse output (maximum 5 kHz) with configurable pulse factor between 0.001 and 1000 pulses per unit. The pulse width is configurable from 0.1 … 2000 ms. The output is electrically isolated from the current outputs.

	Passive	Active
Operating voltage	16 V ≤ U_{CEH} ≤ 30 V DC 0 V ≤ U_{CEL} ≤ 2 V	16 V ≤ U ≤ 30 V DC Load ≥ 150 Ω
Operating current	0 mA ≤ I_{CEH} ≤ 0.2 mA 2 mA ≤ I_{CEL} ≤ 220 mA	-
fmax	5 kHz	5 kHz
Pulse width	0.1 … 2000 ms	0.1 … 2000 ms
Terminals	51 / 52	51 / 52

IMPORTANT (NOTE)

If you are using a mechanical totalizer, we recommend setting a pulse width of ≥ 30 ms and a maximum frequency of fmax ≤ 3 kHz.

Digital switching outputs

The switching function can be selected via the software.

Switching function	— System monitoring (normally closed contact or normally open contact) — Forward / reverse (closed for forward) — Min. /max. alarm (normally closed contact or normally open contact)
Output "closed"	0 V ≤ U_{CEL} ≤ 2 V 2 mA ≤ I_{CEL} ≤ 220 mA
Output "open"	16 V ≤ U_{CEH} ≤ 30 V DC 0 mA ≤ I_{CEH} ≤ 0.2 mA
Terminals	41 / 42

Digital switching inputs

The switching function can be selected via the software.

Switching function	— External output zero return — External totalizer reset
Input "On"	16 V ≤ U_{KL} ≤ 30 V
Input "Off"	0 V ≤ U_{KL} ≤ 2 V
Internal resistance	Ri = 2 kΩ
Terminals	81 / 82

All inputs and outputs are electrically isolated from one other.

HART protocol

The device is registered with the HART Communication Foundation.

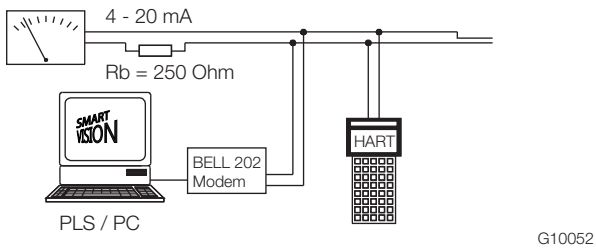

Fig. 23: Communication via HART protocol

HART protocol	
Configuration	— Directly on the device — Via software DSV401 + HART-DTM
Transmission	FSK modulation on voltage output 4 … 20 mA according to Bell 202 standard
Baud rate	1200 baud
Display	Logic 1: 1200 Hz Logic 0: 2200 Hz
Maximum signal amplitude	1.2 mAss
Load at current output	250 … 560 Ω (in hazardous area: maximum 300 Ω)

Cable	
Design	Two-wire cable AWG 24, twisted
Maximum length	1500 m (4921 ft)

See the interface description for detailed information.

System integration:
Communication (configuration, parameterization) can be performed with the DTM (Device Type Manager) available for the device and the corresponding framework applications as per FDT 0.98 or 1.2 (DSV401 R2).
Other tool/system integrations (e.g., Emerson AMS/Siemens PCS7) are available on request.
The necessary DTMs can also be downloaded from www.abb.com/flow.

Electrical connections

Connection of transmitter models to peripherals

Models FCB330, FCB350, FCH330, FCH350, FCT330, FCT350

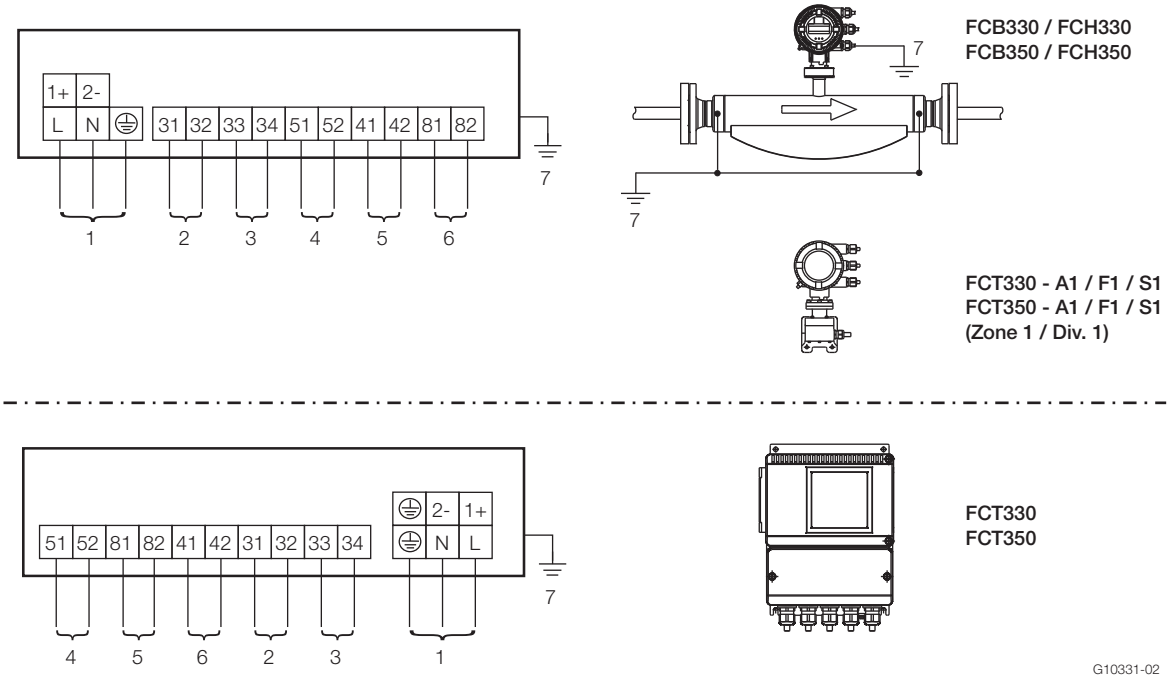

Fig. 24
1 Power supply | 2 Current output 1 | 3 Current output 2 | 4 Pulse output | 5 Digital switching output | 6 Digital switching input | 7 Equipotential bonding (PA)

IMPORTANT (NOTE)

When using the device in hazardous areas, note the additional connection data in the chapter titled "Ex relevant specifications"!

Terminal	Function
L / N / PE	Power supply, 100 … 230 V AC, 50/60 Hz
1+ / 2- / PE	Power supply — 24 V AC, 50/60 Hz — 24 V DC
31 / 32	Current output 1, active 0/4 … 20 mA , (0 Ω ≤R_B ≤560 Ω, FCT300-A1/F1:1 0 Ω ≤R_B ≤300 Ω)
	Current output 1, passive 4 … 20 mA (0 Ω ≤R_B ≤600 Ω), source voltage 12 ≤U_q ≤ 30 V
33 / 34	Current output 2, passive 4 … 20 mA (0 Ω ≤R_B ≤600 Ω), source voltage 12 ≤U_q ≤ 30 V
51 / 52	Pulse output, passive fmax = 5 kHz, pulse width = 0.1 … 2000 ms, 0.001 ... 1000 pulses/unit — "Closed": 0 V ≤ U_{CEL} ≤ 2 V, 2 mA ≤ I_{CEL} ≤ 220 mA — "Open": 16 V ≤ U_{CEH} ≤ 30 V DC, 0 mA ≤ I_{CEH} ≤ 0.2 mA
	Pulse output active, U = 16 … 30 V, load ≥ 150 Ω, fmax = 5 kHz
41 / 42	Digital switching output, passive — "Closed": 0 V ≤ U_{CEL} ≤ 2 V, 2 mA ≤ I_{CEL} ≤ 220 mA — "Open": 16 V ≤ U_{CEH} ≤ 30 V DC, 0 mA ≤ I_{CEH} ≤ 0.2 mA
81 / 82	Digital switching input, passive — Input "On": 16 V ≤ UKL ≤ 30 V — Input "Off": 0 V ≤ UKL ≤ 2 V
-	Equipotential bonding "PA" When the FCT300 transmitter is connected to the FCB3xx / FCH3xx flowmeter sensor, the transmitter must also be connected to "PA".

Connection examples for the peripherals

Current outputs (including HART communication)

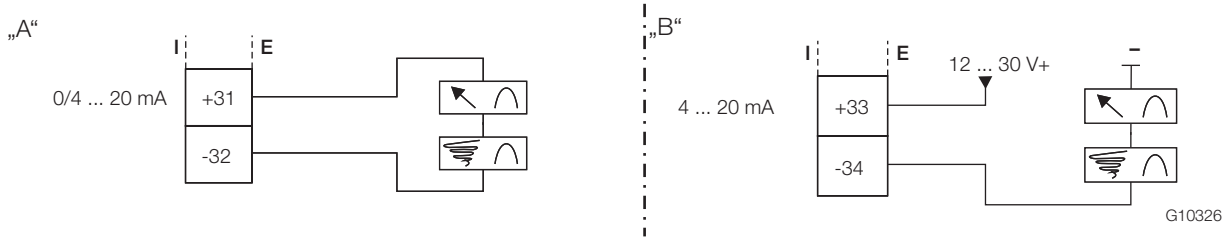

Fig. 25: Active / passive current outputs
"A" Active | "B" Passive | I Internal | E External

Digital switching output and digital switching input

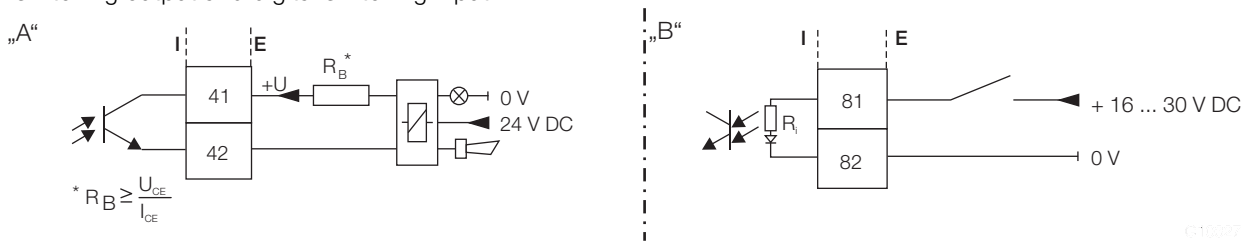

Fig. 26
"A" Output for system monitoring, min. / max. alarm for empty meter tube or forward / reverse signal |
"B" Input for external totalizer reset or external output zero return | I Internal | E External

Pulse output

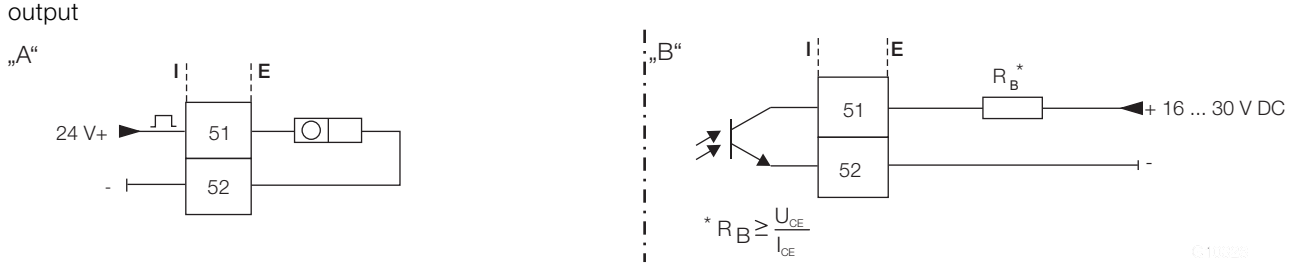

Fig. 27: Active / passive pulse output
"A" Active | "B" Passive (optocoupler) | I Internal | E External

Connection of transmitter to flowmeter sensor

FCT330, FCT350 transmitter to FCB330, FCB350, FCH330, FCH350 flowmeter sensor

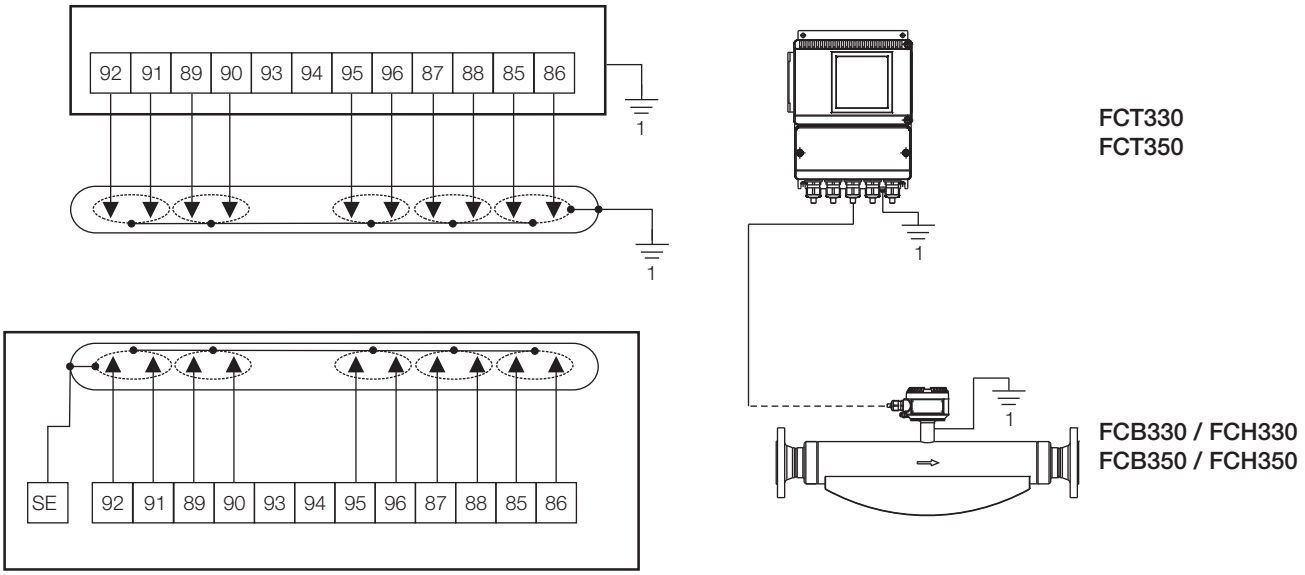

Fig. 28
1 Equipotential bonding (PA)

Terminal	Corresponding wire color	Function
85	White	Sensor 1
86	Brown	Sensor 1
87	Green	Sensor 2
88	Yellow	Sensor 2
89	Black	Temperature
90	Violet	Temperature

Terminal	Corresponding wire color	Function
91	Gray	Driver
92	Pink	Driver
93	-	Not used
94	-	Not used
95	Blue	Temperature
96	Red	Temperature

IMPORTANT (NOTE)

The precise position of the PA terminals may vary according to the device type. Each terminal is marked accordingly. When the FCT330, FCT350 transmitter is connected to the FCB330, FCB350, FCH330, FCH350 flowmeter sensor, the transmitter must also be connected to "PA".

The following flowmeter sensor / transmitter combinations are permitted:

— FCB330, FCH330 flowmeter sensor with FCT330 transmitter
— FCB350, FCH350 flowmeter sensor with FCT350 transmitter

Connection of transmitter to flowmeter sensor in Zone 1 / Div. 1

FCT330, FCT350 transmitter to FCB330, FCB350, FCH330, FCH350 flowmeter sensor

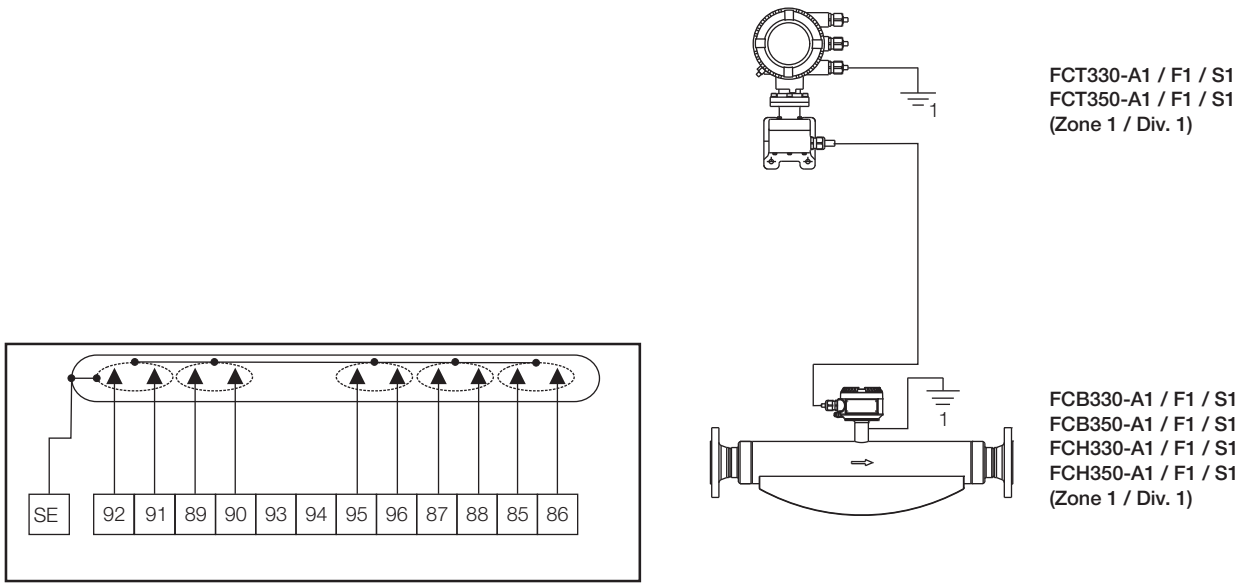

Fig. 29
1 Equipotential bonding (PA)

Terminal	Corresponding wire color	Function
85	White	Sensor 1
86	Brown	Sensor 1
87	Green	Sensor 2
88	Yellow	Sensor 2
89	Black	Temperature
90	Violet	Temperature

Terminal	Corresponding wire color	Function
91	Gray	Driver
92	Pink	Driver
93	-	Not used
94	-	Not used
95	Blue	Temperature
96	Red	Temperature

IMPORTANT (NOTE)

The wires must be connected in pairs in order to ensure EMC protection.
The following flowmeter sensor / transmitter combinations are permitted:

— FCB330, FCH330 flowmeter sensor with FCT330 transmitter
— FCB350, FCH350 flowmeter sensor with FCT350 transmitter

Dimensions

Transmitter in remote mount design (option F1 or F2)

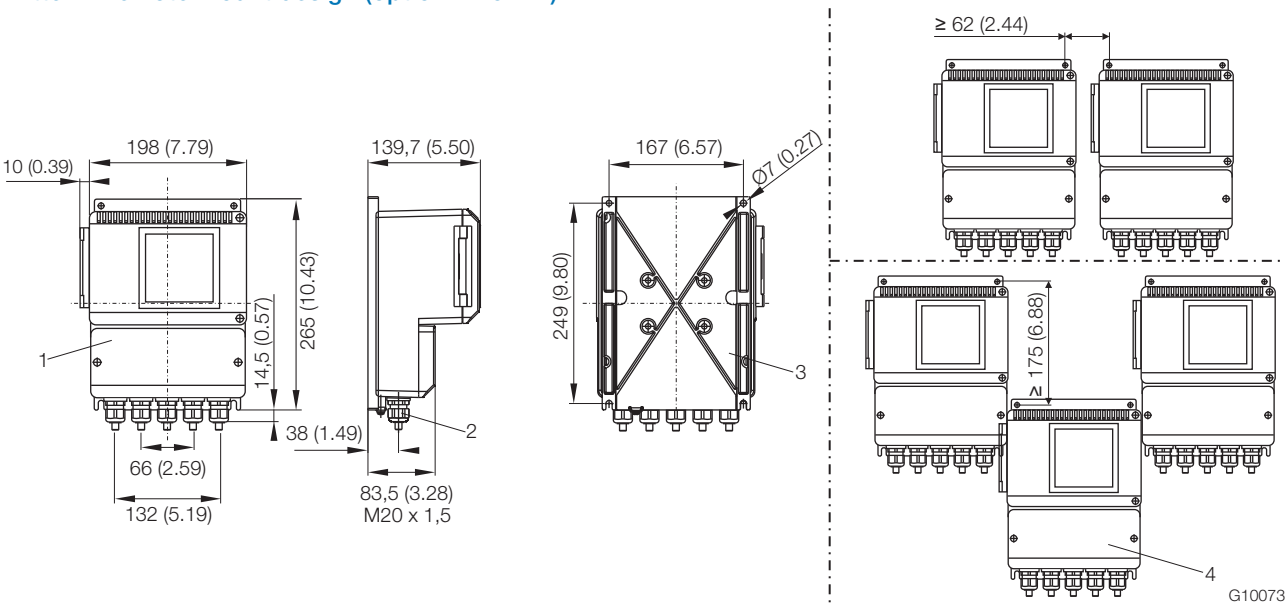

Fig. 30: Dimensions in mm (inch)
1 Field-mount enclosure with window | 2 Cable gland M20 x 1.5 or 1/2" NPT |
3 Installation holes for pipe mounting set, for 2" pipe installation; mounting set available on request (order no. 612B091U07) |
4 IP 67 degree of protection

Transmitter in remote mount design (option R1 or R2)

IP 65 / 67, NEMA 4X

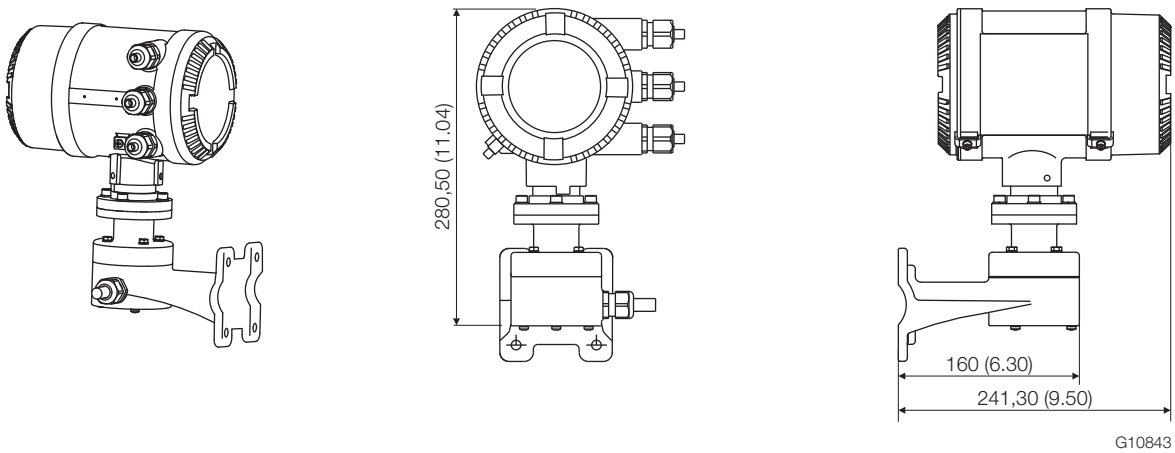

Fig. 31: Dimensions in mm (inch)

Ex relevant specifications acc. to ATEX / IECEx / NEPSI

Electrical data

Overview of the different output options

Versions	ATEX, IECEx, NEPSI Zone 2	ATEX, IECEx, NEPSI Zone 1
Version I Output option A1, A2, H1, H2 in the order number	— Current output 1: Active — Current output 2: Passive — Pulse output: Active / passive, switchable — Switching input and output: Passive	— Current output 1: Active — Current output 2: Passive — Pulse output: Passive — Switching input and output: Passive
Version II Output option A3, H3 in the order number		— Current output 1: Passive — Current output 2: Passive — Pulse output: Passive — Switching input and output: Passive

Version I: Active / passive current outputs

Model FCx3xx-A1, FCT3xx-A1 or FCx3xx-A2, FCT3xx-A2 or FCx3xx-S2, FCT3xx-S2												
	Type of protection "nA" (Zone 2)		General operating values		Type of protection "e" (Zone 1)		Type of protection "ib" (Zone 1)					
Current output 1, active Terminals 31 / 32 Terminal 32 is connected to "PA"	U_i (V)	I_i (mA)	U_b (V)	I_b (mA)	U (V)	I (mA)	U_o (V)	I_o (mA)	P_o (mW)	C_o (nF)	C_o pa (nF)	L_o (mH)
	30	30	30	30	60	35	20	100	500	217	0	3.8
							U_i (V)	I_i (mA)	P_i (mW)	C_i (nF)	C_i pa (nF)	L_i (mH)
							60	100	500	2.4	2.4	0.17
Current output 2, passive Terminals 33 / 34 Terminal 34 is connected to "PA"	30	30	30	30	60	35	30	100	760	2.4	2.4	0.17
Pulse output, passive Terminals 51 / 52	30	65	30	65	60	35	15	30	115	2.4	2.4	0.17
Switching output, passive Terminals 41 / 42	30	65	30	65	60	35	15	30	115	2.4	2.4	0.17
Switching input, passive Terminals 81 / 82	30	10	30	10	60	35	30	60	500	2.4	2.4	0.17

All inputs and outputs are electrically isolated from one other and from the power supply. Only current outputs 1 and 2 in zone 1 design are not electrically isolated from one another.

Version II: Passive / passive current outputs

Model FCx3xx-A1, FCT3xx-A1 or FCx3xx-A2, FCT3xx-A2 or FCx3xx-S2, FCT3xx-S2												
	Type of protection "nA" (Zone 2)		General operating values		Type of protection "e" (Zone 1)		Type of protection "ia" (Zone 1)					
	U_i (V)	I_i (mA)	U_b (V)	I_b (mA)	U (V)	I (mA)	U_i (V)	I_i (mA)	P_i (mW)	C_i (nF)	C_i pa (nF)	L_i (mH)
Current output 1, passive Terminals 31 / 32	30	30	30	30	60	35	60	300	2000	0.47	0.47	0.17
Current output 2, passive Terminals 33 / 34	30	30	30	30	60	35	60	300	2000	0.47	0.47	0.17
Pulse output, passive Terminals 51 / 52	30	65	30	65	60	35	60	300	2000	0.47	0.47	0.17
Switching output, passive Terminals 41 / 42	30	65	30	65	60	35	60	300	2000	0.47	0.47	0.17
Switching input, passive Terminals 81 / 82	30	10	30	10	60	35	60	300	2000	0.47	0.47	0.17

All inputs and outputs are electrically isolated from one other and from the auxiliary power.

Special connection conditions

The output circuits are designed so that they can be connected to both intrinsically-safe and non-intrinsically-safe circuits.
It is not permitted to combine intrinsically safe and non-intrinsically safe circuits. When changing the type of protection, refer to the chapter titled "Changing the type of protection" in the commissioning instructions (CI/FCB300/FCH300) or the operating instructions (OI/FCB300/FCH300).
On intrinsically-safe circuits, equipotential bonding must be in place along the entire length of the cable used for the current outputs.
The rated voltage of the non-intrinsically safe circuits is U_M = 60 V.
The switching output and the pulse output (terminals 41 / 42 and 51 / 52) can be wired internally as a NAMUR contact for the purpose of connecting a NAMUR amplifier.

The cable glands are supplied in black by default. If the signal outputs are wired to intrinsically-safe circuits, we recommend that you use the light blue caps supplied for the appropriate cable entries.

IMPORTANT (NOTE)

If the protective conductor (PE) is connected in the flowmeter's terminal box, you must ensure that no dangerous potential difference can arise between the protective conductor (PE) and the equipotential bonding (PA) in the hazardous area.

Flowmeter sensor model FCB3xx / FCH3xx
Temperature class

Model FCx3xx-A1Y... or FCx3xx-S1Y... Zone 1			
Ambient temperature	≤40 °C (≤104 °F)	≤50 °C (≤122 °F)	≤60 °C (≤140 °F)
Temperature class			
T1	200 °C (392 °F)	200 °C (392 °F)	200 °C (392 °F)
T2	200 °C (392 °F)	200 °C (392 °F)	200 °C (392 °F)
T3	185 °C (365 °F)	180 °C (356 °F)	180 °C (356 °F)
T4	125 °C (257 °F)	120 °C (248 °F)	120 °C (248 °F)
T5	85 °C (185 °F)	85 °C (185 °F)	75 °C (167 °F)
T6	65 °C (149 °F)	65 °C (149 °F)	60 °C (140 °F)

Model FCx3xx-A2Y... or FCx3xx-S2Y... Zone 2			
Ambient temperature	≤40 °C (≤104 °F)	≤50 °C (≤122 °F)	≤60 °C (≤140 °F)
Temperature class			
T1	200 °C (392 °F)	200 °C (392 °F)	180 °C (356 °F)
T2	200 °C (392 °F)	200 °C (392 °F)	180 °C (356 °F)
T3	180 °C (356 °F)	180 °C (356 °F)	180 °C (356 °F)
T4	115 °C (239 °F)	115 °C (239 °F)	115 °C (239 °F)
T5	80 °C(176 °F)	80 °C(176 °F)	75 °C (167 °F)
T6	60 °C (140 °F)	60 °C (140 °F)	60 °C (140 °F)

Ambient and process conditions:

T_{amb}	-20 ... 60 °C (-4 ... 140 °F)
$T_{amb, optional}$	-40 ... 60 °C (-40 ... 140 °F) (only for integral mount design devices)
T_{medium}	-50 ... 200 °C (-58 ... 392 °F)
Protection class	IP 65, IP 67, and NEMA 4X

Hazardous area approval ATEX / IECEx / NEPSI

Specific marking according to ATEX, IECEx and NEPSI applies depending on the design of the flowmeter sensor (integral or remote mount design).

IMPORTANT (NOTE)

ABB reserves the right to make changes to the Ex-marking. The exact marking can be found at the name plate of the meter.

Modell FCx3xx-A2A… or FCx3xx-S2A… (remote mount design in Zone 2)		
Approval	**Marking**	**Comment**
ATEX	II 3 G Ex nA IIC T6 … T2 II 2 D Ex tD IIIC T85°C .. Tmedium	-
IECEx or NEPSI	Ex nA IIC T6 .. T2 Gc Ex tb IIIC T85°C Tmedium	-

Model FCx3xx-A1A… or FCx3xx-S1A… (remote mount design in Zone 1)		
Approval	**Marking**	**Comment**
ATEX	II 1 G Ex ia IIC T6 … T2 II 1 D Ex ia IIIC T85°C… Tmedium	-
IECEx or NEPSI	T2 Ga Ex ia IIIC T85°C .. Tmedium Da	-

Model FCx3xx-A2Y… or FCx3xx-S2Y… (integral mount design in Zone 2)		
Approval	**Marking**	**Comment**
ATEX	II 3 G Ex nA nR IIC T6 … T2 II 2 D Ex tD IIIC T85°C .. Tmedium	-
IECEx or NEPSI	Ex nA nR IIC T6 .. T2 Gc Ex tb IIIC T85°C Tmedium Db	-

Modell FCx3xx-A1Y… or FCx3xx-S1Y… (integral mount design in Zone 1)		
Approval	**Marking**	**Comment**
ATEX		
Version II	II 1/2 G Ex d e ia IIC T6 .. T2 II 2 D Ex ia tb IIIC T85°C .. Tmedium	2 passive analog outputs, outputs "ia" / "e", depending on user wiring.
Version I	II 1/2 G Ex d e ia ib IIC T6 .. T2 or II 1/2 G Ex d e ia IIC T6 .. T2 II 2 D Ex ia ia tb IIIC T85°C .. Tmedium or II 2 D Ex ia tb IIIC T85°C .. Tmedium	Active / passive analog outputs, outputs "ib" / "e", depending on user wiring.
IECEx or NEPSI		
Version II	Ex d e ia IIC T6 .. T2 Ga/Gb Ex ia tb IIIC T85°C .. Tmedium	2 passive analog outputs, outputs "ia" / "e", depending on user wiring.
Version I	Ex d e ia ib IIC T6 .. T2 Ga/Gb or Ex d e ia IIC T6 .. T2 Ga/Gb Ex ia ib tb IIIC T85°C .. Tmedium or Ex ia tb IIIC T85°C .. Tmedium	Active / passive analog outputs, outputs "ib" / "e", depending on user wiring.

Transmitter model FCT300 in remote mount design

Ambient and process conditions:

T_{amb}	-20 ... 60 °C (-4 ... 140 °F)
Protection class	IP 65, IP 67, and NEMA 4X / Type 4X

Hazardous area approval ATEX / IECEx / NEPSI

Specific marking according to ATEX, IECEx and NEPSI applies depending on the design of the flowmeter sensor (integral or remote mount design).

IMPORTANT (NOTE)

ABB reserves the right to make changes to the Ex-marking. The exact marking can be found at the name plate of the meter.

Model FCT3xx-Y0... (Transmitter outside the hazardous area, Sensor in Zone 0, 1 or 2)		
Approval	**Marking**	**Comment**
ATEX	II (1) G [Ex ia] IIC	-
IECEx or NEPSI	[Ex ia Ga] IIC	-

Model FCT3xx-A2... or FCT3xx-S2... (Transmitter in Zone 2, Sensor in Zone 0, 1 or 2)		
Approval	**Marking**	**Comment**
ATEX	II 3(2) G Ex nA nR [ia] IIC T6 II 2 D Ex tb [ia] IIIC T85°C	-
IECEx or NEPSI	Ex nA nR [ia] IIC T6 Gc (Gb) Ex tb [ia] IIIC T85°C Db	-

Modell FCT3xx-A1... or FCT3xx-S1... (Transmitter in Zone 1, Sensor in Zone 0, 1 or 2)		
Approval	**Marking**	**Comment**
ATEX		
Version II	II 2 (1) G Ex d e ia IIC T6 II 2 (1) D Ex ia tb IIIC T85°C	2 passive analog outputs, outputs "ia" / "e", depending on user wiring.
Version I	II 2 (1) G Ex d e ib [ia] IIC T6 or II 2 (1) G Ex d e [ia] IIC T6 II 2 (1) D Ex ib tb [ia] IIIC T85°C or II 2 (1) D Ex tb [ia] IIIC T85°C	Active / passive analog outputs, outputs "ib" / "e", depending on user wiring.
IECEx or NEPSI		
Version II	Ex d e ia IIC T6 Gb (Ga) Ex ia tb IIIC T85°C Db (Da)	2 passive analog outputs, outputs "ia" / "e", depending on user wiring.
Version I	Ex d e ib [ia Ga] IIC T6 Gb or Ex d e [ia Ga] IIC T6 Gb Ex ib tb [ia Da] IIIC T85°C Db or Ex tb [ia Da] IIIC T85°C Db	Active / passive analog outputs, outputs "ib" / "e", depending on user wiring.

Ex relevant specifications acc. to cFMus

Overview of the different output options

Versions	Class I Div. 2	Class I Div. 1
Version I Output option A1, A2, H1, H2 in the order number	— Current output 1: Active — Current output 2: Passive — Pulse output: Active / passive, switchable — Switching input and output: Passive	— Current output 1: Active — Current output 2: Passive — Pulse output: Passive — Switching input and output: Passive
Version II Output option A3, H3 in the order number		— Current output 1: Passive — Current output 2: Passive — Pulse output: Passive — Switching input and output: Passive

Electrical data for Div. 2 / Zone 2

Version I: Active / passive current outputs and Version II: passive / passive current outputs

Model FCx3xx-F2, FCT3xx-F2		
	Type of protection NI	
	$Vmax_o$ (V)	$Imax_o$ (mA)
Current output 1 Terminals 31 / 32	30	30
Current output 2 Terminals 33 / 34	30	30
Pulse output Terminals 51 / 52	30	65
Switching output Terminals 41 / 42	30	65
Switching input Terminals 81 / 82	30	10

All inputs and outputs are electrically isolated from one other and from the power supply.

Electrical data for Div. 1 / Zone 1
Version I: Active / passive current outputs

Model FCx3xx-F1, FCT3xx-F1								
	Type of protection non IS		**Type of protection IS**					
	$Vmax_o$ (V)	$Imax_o$ (mA)	$Vmax_o$ (V)	$Imax_o$ (mA)	P_o (mW)	C_o (nF)	$C_{o\ PA}$ (nF)	L_0 (mH)
Current output 1, active	30	30	20	100	500	217	0	3.8
Terminals 31 / 32			VMax (V)	I_{Max} (mA)	P_i (mW)	C_i (nF)	$C_{i\ PA}$ (nF)	L_i (mH)
			60	100	500	2.4	2.4	0.17
Current output 2, passive Terminals 33 / 34	30	30	30	100	760	2.4	2.4	0.17
Pulse output, active or passive Terminals 51 / 52	30	65	15	30	115	2.4	2.4	0.17
Switching output, passive Terminals 41 / 42	30	65	15	30	115	2.4	2.4	0.17
Switching input, passive Terminals 81 / 82	30	10	30	60	500	2.4	2.4	0.17

All inputs and outputs are electrically isolated from one other and from the power supply. Only current outputs 1 and 2 are not electrically isolated from one another.

Version II: Passive / passive current outputs

Model FCx3xx-F1, FCT3xx-F1								
	Type of protection non IS		**Type of protection IS**					
	Vmax (V)	Imax (mA)	Vmax (V)	Imax (mA)	Pi (mW)	Ci (nF)	$C_{i\ PA}$ (nF)	L_i (mH)
Current output 1, passive Terminals 31 / 32	30	30	60	300	2000	0.47	0.47	0.17
Current output 2, passive Terminals 33 / 34	30	30	60	300	2000	0.47	0.47	0.17
Pulse output, active or passive Terminals 51 / 52	30	65	60	300	2000	0.47	0.47	0.17
Switching output, passive Terminals 41 / 42	30	65	60	300	2000	0.47	0.47	0.17
Switching input, passive Terminals 81 / 82	30	10	60	300	2000	0.47	0.47	0.17

All inputs and outputs are electrically isolated from one other and from the power supply.

Special connection conditions

The output circuits are designed so that they can be connected to both intrinsically-safe and non-intrinsically-safe circuits.
It is not permitted to combine intrinsically-safe and non-intrinsically safe circuits. When changing the type of protection, refer to the chapter titled "Changing the type of protection" in the commissioning instructions (CI/FCB300/FCH300) or the operating instructions (OI/FCB300/FCH300).
On intrinsically-safe circuits, equipotential bonding must be in place along the entire length of the cable used for the current outputs.

The rated voltage of the non-intrinsically-safe circuits is U_M = 60 V.
Provided that rated voltage UM = 60 V is not exceeded if connections are established to non-intrinsically-safe external circuits, intrinsic safety is retained.

IMPORTANT (NOTE)

The transmitter and flowmeter sensor enclosures must be connected to equipotential bonding PA. The operator must ensure that when connecting the protective conductor PE no potential differences can occur between the protective conductor PE and the equipotential bonding PA.

Flowmeter sensor model FCB300 / FCH300
Temperature class

Model FCx3xx-F1..., in Class I Div. 1			
Ambient temperature	≤40 °C (≤104 °F)	≤50 °C (≤122 °F)	≤60 °C (≤140 °F)
Temperature class			
T1	200 °C (392 °F)	200 °C (392 °F)	200 °C (392 °F)
T2	200 °C (392 °F)	200 °C (392 °F)	200 °C (392 °F)
T3	185 °C (365 °F)	180 °C (356 °F)	180 °C (356 °F)
T4	125 °C (257 °F)	120 °C (248 °F)	120 °C (248 °F)
T5	85 °C (185 °F)	85 °C (185 °F)	75 °C (167 °F)
T6	65 °C (149 °F)	65 °C (149 °F)	60 °C (140 °F)

Model FCx3xx-F2..., in Class I Div. 2			
Ambient temperature	≤40 °C (≤104 °F)	≤50 °C (≤122 °F)	≤60 °C (≤140 °F)
Temperature class			
T1	200 °C (392 °F)	200 °C (392 °F)	180 °C (356 °F)
T2	200 °C (392 °F)	200 °C (392 °F)	180 °C (356 °F)
T3	180 °C (356 °F)	180 °C (356 °F)	180 °C (356 °F)
T4	115 °C (239 °F)	115 °C (239 °F)	115 °C (239 °F)
T5	80 °C (176 °F)	80 °C (176 °F)	75 °C (167 °F)
T6	60 °C (140 °F)	60 °C (140 °F)	60 °C (140 °F)

Ambient and process conditions:

T_{amb}	-20 ... 60 °C (-4 ... 140 °F)
$T_{amb, optional}$	-40 ... 60 °C (-40 ... 140 °F) (only for integral mount design devices)
T_{medium}	-50 ... 200 °C (-58 ... 392 °F)
Protection class	IP 65, IP 67, and NEMA 4X / Type 4X

IMPORTANT (NOTE)

In the case of the remote mount design, the signal cable between the flowmeter sensor and the transmitter must measure at least 5 m (16.4 ft) in length. Install conduit seals within 18” (45 cm).

Hazardous area approval cFMus

Specific marking according to FM applies depending on the design of the flowmeter sensor (integral or remote mount design).

IMPORTANT (NOTE)

ABB reserves the right to make changes to the Ex-marking. The exact marking can be found at the name plate of the meter.

Model FCx3xx-F2A… (remote mount design in Zone 2, Div 2)		
Approval	**Marking**	**Comment**
FM (marking US)	NI: CL I,II,III, DIV 2, GPS ABCDEFG CL I, ZN2, AEx nA IIC T6 ... T2 ZN 21 AEx tb IIIC T85°C ... T165°C	-
FM (marking Canada)	NI: CL I, II, III, Div 2 GPS ABCDEFG Ex nA IIC T6 … T2	-

Model FCx3xx-F2Y… (integral mount design in Zone 2, Div 2)		
Approval	**Marking**	**Comment**
FM (marking US)	NI: CL I, II, III, Div 2 GPS ABCDEFG DIP: CL II Div 1 GPS EFG DIP : CL III, Div 1,2 CL I, ZN 2, AEx nA nR IIC T6 ... T2 ZN 21 AEx tb IIIC T85°C ... T165°C	-
FM (marking Canada)	NI: CL I, II, III, Div 2 GPS ABCDEFG DIP: CL II Div 1 GPS EFG DIP : CL III, Div 1,2 Ex nA nR IIC T6 … T2	-

Model FCx3xx-F1A… (remote mount design in Zone 1, Div 1)		
Approval	**Marking**	**Comment**
FM (marking US)	CL I, II, III, Div 1, GPS ABCDEFG CL I, ZN0, AEx ia IIC T6 ... T2 ZN 20 AEx ia IIIC T85°C ... T165°C	-
FM (marking Canada)	CL I, II, III, Div 1, GPS ABCDEFG Ex ia IIC T6 … T2	-

Model FCx3xx-F1Y... (integral mount design in Zone 1, Div 1)		
Approval	**Marking**	**Comment**
FM (marking US)		
Version II	IS: CL I, Div 1, GPS ABCD NI: CL I,II,III, DIV2, GPS ABCDEFG XP: CL I, Div 1, GPS ABCD DIP: CL II, Div 1, GPS EFG DIP: CL III, Div 1, 2 CL I, ZN1, AEx d ia IIC T6 ZN 21 AEx ia tb IIIC T85°C to T165°C	2 passive analog outputs, outputs "ia" / "e", depending on user wiring.
Version I	IS: CL I, Div 1, GPS ABCD NI: CL I, II, III, DIV2, GPS ABCDEFG XP: CL I, Div 1, GPS ABCD DIP: CL II, Div 1, GPS EFG DIP: CL III, Div 1, 2 CL I, ZN 1, AEx d ia ib IIC T6 or CL I, ZN 1, AEx d ia IIC T6 ZN 21 AEx ib ia tb IIIC T85°C or ZN21 AEx tb ia IIC T6	Active / passive analog outputs, outputs "ib" / "e", depending on user wiring.
FM (marking Canada)		-
Version II	IS: CL I, Div 1, GPS ABCD NI: CL I,II,III, Div 2, GPS ABCDEFG XP: CL I, Div 1, GPS BCD DIP CL II, Div 1, GPS EFG DIP CL III, Div 1, 2 Ex d ia IIC T6	2 passive analog outputs, outputs "ia" / "e", depending on user wiring.
Version I	IS: CL I, Div 1, GPS ABCD NI: CL I, II, III, Div 2, GPS ABCDEFG XP: CL I, Div 1, GPS BCD DIP: CL II, Div 1, GPS EFG DIP: CL III, Div 1, 2 Ex d ia ib IIC T6 or Ex d ia IIC T6	Active / passive analog outputs, outputs "ib" / "e", depending on user wiring.

Transmitter model FCT300 in remote mount design

Ambient and process conditions:

T_{amb}	-20 ... 60 °C (-4 ... 140 °F)
Protection class	IP 65, IP 67, and NEMA 4X / Type 4X

Hazardous area approval cFMus

Specific coding according to FM applies depending on the design of the flowmeter sensor (integral or remote mount design).

IMPORTANT (NOTE)

ABB reserves the right to make changes to the Ex-marking. The exact marking can be found at the name plate of the meter.

Model FCT3xx-Y0... (Transmitter in General Purpose and Sensor in Zone 2, Div 2 or Zone 0, Div 1)		
Approval	**Marking**	**Comment**
FM (marking US)	NI: CL I, II, III, Div 2 GPS ABCDEFG DIP: CL II Div 1 GPS EFG DIP: CL III, Div 1,2	-
FM (marking Canada)	NI: CL I, II, III, Div 2 GPS ABCDEFG DIP: CL II Div 1 GPS EFG DIP: CL III, Div 1,2	-

Model FCT3xx-F2... (Transmitter and Sensor in Zone 2, Div 2)		
Approval	**Marking**	**Comment**
FM (marking US)	NI: CL I, II, III, Div 2 GPS ABCDEFG DIP: CL II Div 1 GPS EFG DIP: CL III, Div 1,2 CL I, ZN 2, AEx nA nR [ia] IIC T6 ZN 21 AEx tb [ia] IIIC T85°C	-
FM (marking Canada)	NI: CL I, II, III, Div 2 GPS ABCDEFG DIP: CL II Div 1 GPS EFG DIP: CL III, Div 1,2 Ex nA nR [ia] IIC T6	-

Model FCT3xx-F1… (Transmitter in Zone 1, Div 1, Sensor in Zone 0, 1 or 2, Div 2 oder Div 1)		
Approval	**Marking**	**Comment**
FM (marking US)		
Version II	IS: CL I, Div 1, GPS ABCD NI: CL I, II, III, DIV2, GPS ABCDEFG XP: CL I, Div 1, GPS ABCD DIP: CL II, Div 1, GPS EFG DIP: CL III, Div 1, 2 CL I, ZN1, AEx d ia IIC T6 ZN 21 AEx ia tb IIIC T85°C	2 passive analog outputs, outputs "ia" / "e", depending on user wiring.
Version I	IS: CL I, Div 1, GPS ABCD NI: CL I, II, III, DIV2, GPS ABCDEFG XP: CL I, Div 1, GPS ABCD DIP: CL II, Div 1, GPS EFG DIP: CL III, Div 1, 2 CL I, ZN 1, AEx d ib [ia] IIC T6 or CL I, ZN1, AEx d [ia] IIC T6 ZN21 AEx ib tb [ia] IIIC T85°C or ZN21 AEx tb [ia] IIC T6	Active / passive analog outputs, outputs "ib" / "e", depending on user wiring.
FM (marking Canada)		
Version II	IS: CL I, Div 1, GPS ABCD NI: CL I, II, III, Div 2, GPS ABCDEFG XP: CL I, Div 1, GPS BCD DIP: CL II, Div 1, GPS EFG DIP: CL III, Div 1, 2 Ex d ia IIC T6	2 passive analog outputs, outputs "ia" / "e", depending on user wiring.
Version I	IS: CL I, Div 1, GPS ABCD NI: CL I, II, III, Div 2, GPS ABCDEFG XP: CL I, Div 1, GPS BCD DIP: CL II, Div 1, GPS EFG DIP CL III, Div 1, 2 Ex d ib [ia] IIC T6 or Ex d [ia] IIC T6	Active / passive analog outputs, outputs "ib" / "e", depending on user wiring.

Trademarks

™ Hastelloy C-4 is a Haynes International trademark

™ Hastelloy C-22 is a Haynes International trademark

™ Hastelloy C-276 is a Haynes International trademark

Data Sheet D184S068U02 Rev. 15

CoriolisMaster FCM2000 Mass Flowmeter

4-wire Compact Design Digital Signal Processor Transmitter Technology

Coriolis Mass Flowmeters are used for high precision measurement of mass flow and density. The fluid need not be electrically conductive

No moving parts, no wear, no maintenance

Ex design acc. to ATEX, IECEx / cFMus [USA]

Transmitter with DSP technology

— The latest digital filter technology assures detection of even the weakest sensor signals

Simultaneous measurement of mass flow, volume flow, density, temperature and concentration

Type-tested acc. to NAMUR

Options

— Expanded density calibration with temperature compensation
— Pressure-resistant housing
— EHEDG-certified
— Concentration measurement

Power and productivity
for a better world™

Contents

1 Overview of flowmeter and transmitter designs 3
1.1 ATEX and IECEx device overview 4
1.2 FM device overview (PID: 3036514) 5
2 General information 6
2.1 Installation Requirements 6
3 Model FCM2000-MC2 11
3.1 Specifications 11
3.2 Dimensions 14
3.3 Ordering information 28
4 Model FCM2000-MS2 31
4.1 Specifications 31
4.2 Dimensions 33
4.3 Ordering information 36
5 Transmitter 38
5.1 Specifications 38
5.2 Concentration measurement DensiMass 39
5.3 Inputs/outputs 39
5.4 Digital Communication 41
5.5 Electrical connections 43
5.6 Dimensions 52
5.7 Ordering information 54
6 Ex relevant specifications in accordance with ATEX/IECEx 55
6.1 Safety-relevant information ATEX / IECEx 55
7 Ex relevant specifications in accordance with cFMus 62
7.1 Data relating to MC2x operation 62
7.2 Data relating to MS2x operation 63
7.3 Electrical data 64
8 Questionnaire 67

1.1 ATEX and IECEx device overview

	Standard/non-Ex		Zone 2/21, 22		Zone 1/21	
Type	**MC23 A, U**		**MC23 M, N**		**MC27 B, E**	
1. Integral mount design − Standard/non-Ex − Ex Zone 2/21, 22 − Ex Zone 1/21	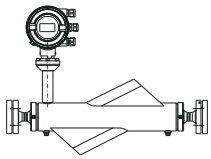		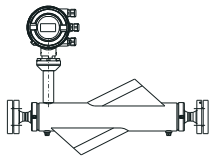		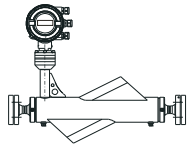	
Type	**ME21 A, U**	**MC21 A, U**	**ME21 M, N**	**MC21 M, N**	**ME26 B, E**	**MC26 B, E**
2. Remote mount design Transmitter and flowmeter sensor − Standard/non-Ex − Ex Zone 1/21	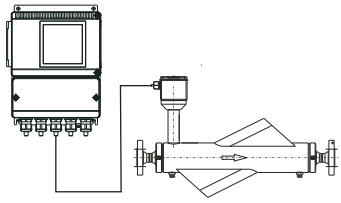		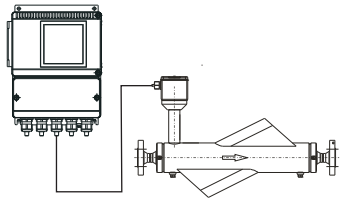		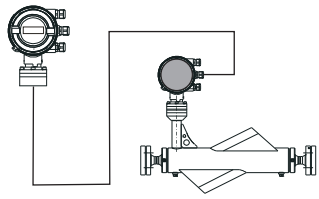	
Type	**ME21 A, U**		**ME21 M, N**		**MC26 B, E**	
3. Remote mount design Transmitter − Standard/non-Ex − Ex Zone 2/21, 22 Flowmeter sensor − Ex Zone 1/21	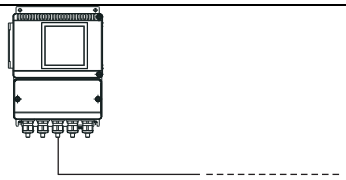		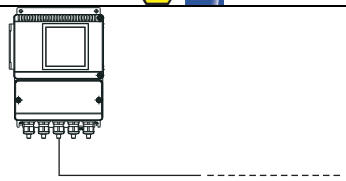		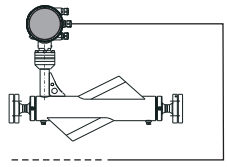	
Type	**ME21 A, U**		**ME21 M, N**	**MC21 M, N**		
4. Remote mount design (small nominal diameters) Transmitter − Standard/non-Ex − Ex Zone 2/21, 22 Flowmeter sensor − Ex Zone 2/21, 22	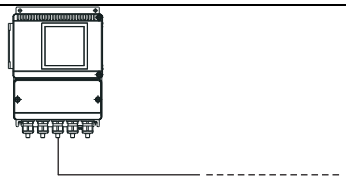		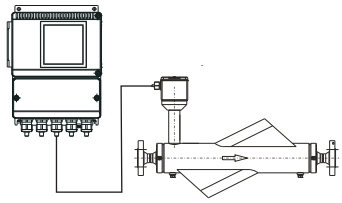			
Type	**ME22 A, U ...**	**MS21 A, U**			**ME27/28 B, E**	**MS26 B, E**
5. Remote mount design (small nominal diameters) Transmitter and flowmeter sensor − Standard/non-Ex − Ex Zone 2/21, 22 − Ex Zone 1/21	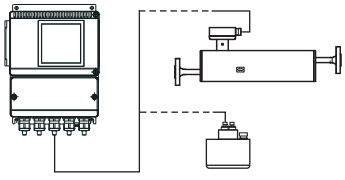				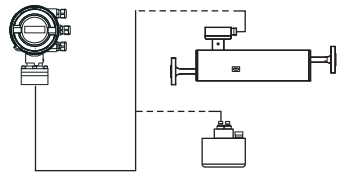	
Type	**ME24/25 A, U ...**				**MS26 B, E**	
6. Remote mount design (small nominal diameters) Transmitter − Standard/non-Ex − Ex Zone 2/21, 22 Flowmeter sensor − Ex Zone 1/21	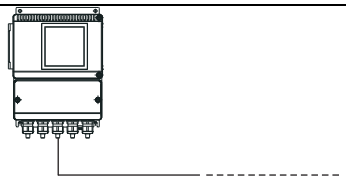				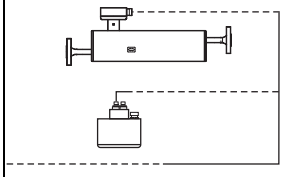 G00387	

Fig. 1: FCM2000 overview

1.2 FM device overview (PID: 3036514)

		Standard/non-Ex		Class I Div. 2 (FM APPROVED)		Class I Div. 1 (FM APPROVED)	
MC2x	**Type**	**MC23 T, X**		**MC23 O, V, P, W**		**MC27 C, Y, D, Q**	
	1. Integral mount design − Standard/non-Ex − Class I Div. 2 − Class I Div. 1	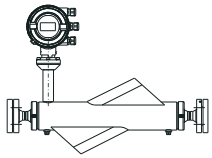		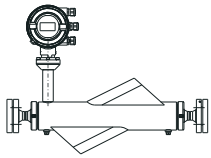		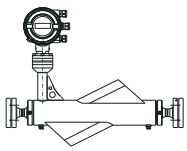 Housing: XP	
	Type	**ME21 T, X**	**MC21 T, X**	**ME21 O, V, P, W**	**MC21 O, V, P, W**	**ME26 C, Y, D, Q**	**MC26 C, Y, D, Q**
	2. Remote mount design Transmitter and flowmeter sensor − Standard/non-Ex − Class I Div. 2 − Class I Div. 1	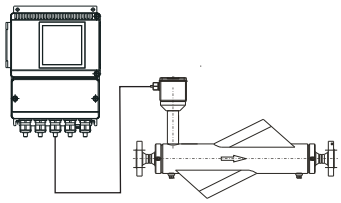		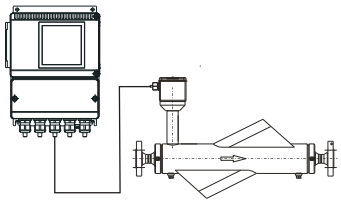		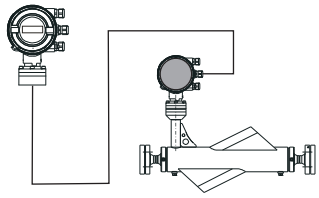	
	Type	**ME21 T, X**		**ME21 O, V, P, W**		**MC26 C, Y, D, Q**	
	3. Remote mount design Transmitter − Standard/non-Ex − Class I Div. 2 Flowmeter sensor − Class I Div. 1	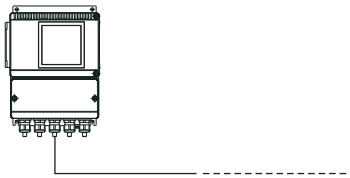		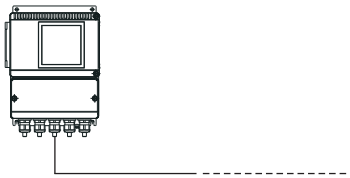		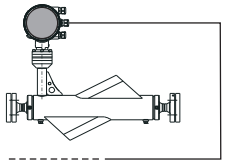	
MS2x	**Type**	**ME22/23 T, X...**	**MS21 T, X**	**ME22/23 O, V, P, W**	**MS21 O, V, P, W**	**ME27/28 C, Y, D, Q**	**MS26 C, Y, D, Q**
	4. Remote mount design (small nominal diameters) Transmitter − Standard/non-Ex − Class I Div. 1 Flowmeter sensor − Class I Div. 2 − Class I Div. 1	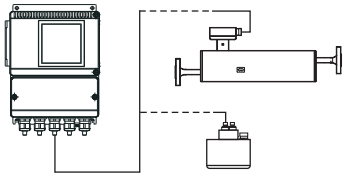		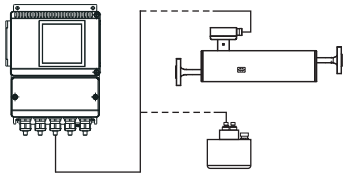		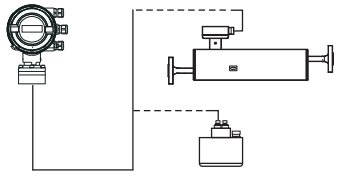	
		ME24/25 T, X ...		**ME24/25 O, V, P, W**		**MS26 C, Y, D, Q**	
	5. Remote mount design (small nominal diameters) Flowmeter sensor − Class I Div. 1	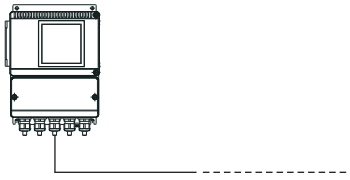		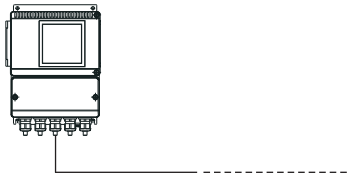		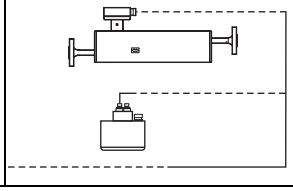 G00899	

Fig. 2: FCM2000 overview

2 General information

The FCM2000 is ABB's economical and uncomplicated mass flowmeter, featuring the new DSP transmitter, either integrated in the flowmeter or mounted separately from it. The compact unit reduces installation and cabling expenditure. Flowrate information can be viewed directly at the meter site and the meter can be installed in systems in an even more space-saving manner than is currently possible.

The FCM2000 operates according to the Coriolis principle. The design offers the following benefits:

- Space-saving, rugged design.
- Wide flow measuring range; meter size "S" (DN 1.5 [1/16"]) to meter size "L" (DN 150 [6"]).
- Variety of process connection options.
- Two separate current outputs for measuring mass or volume flowrate, density, or temperature, as well as one pulse output.
- Contact inputs and outputs.
- HART protocol, PROFIBUS PA, FOUNDATION Fieldbus.
- Ex approval: The user can select the "i" or "e" type of protection for the output circuits; the type chosen will depend on the circuits which are connected. The type of protection can be changed after installation has been completed. The contact outputs can be configured as NAMUR outputs by the user.
- Permissible fluid temperature up to 200 °C (392 °F), CIP-enabled
- Illuminated, 2-line display with data entered using a magnet stick and without opening the housing.
- Certified acc. to EHEDG.

Mass transmitter with digital signal processor (DSP)

The transmitter for the FCM2000 incorporates a digital signal processor (DSP) that enables high-precision mass flow and density measurements to be made. The Coriolis sensor signals are immediately converted into digital data without any intermediate analog steps.

Excellent long-term stability and reliability together with fast signal processing are achieved with the new DSP transmitter.

Self-diagnostic functions for the flowmeter sensor and the transmitter, in combination with absolute zero stability, are benefits you can count on to ensure accurate measurements are taken.

The FCM2000 transmitter is particularly well suited for use in the following cases:

- When mass flowrate is to be metered to the highest degree of accuracy.
- When the fluid density is to be determined.
- When the components of a recipe are to be mixed together.
- When metering non-conductive fluids or highly viscous, solid-loaded liquids, for example.
- In batch filling systems.

2.1 Installation Requirements

2.1.1 General information

Inspection

Before installing the flowmeter sensor, check for physical damage due to possible improper handling during shipment. All claims for damage are to be made promptly to the shipper.

Installation Requirements / System Sizing Information

The FCM2000 is suitable for both indoor and outdoor installations. The standard instrument meets the requirements of Protection Class IP 67. The primary is bidirectional and can be installed in any orientation. It is important to ensure that the meter pipes are always completely filled with fluid.

The corrosion resistance of the fluid wetted materials must be evaluated.

The following points are to be considered during installation:

The preferred flow direction is indicated by the arrow on the flowmeter sensor. Flow in this direction will be indicated as positive (a forward/reverse flow calibration is available as on option).

Installation position

The FCM2000 operates in any orientation. The optimal installation orientation is vertical with the flow upwards.

Supports

In order to support the weight of the flowmeter sensor and to ensure reliable measurements when adverse external effects exist (e. g., vibrations), the primary should be installed in rigid pipelines. Two supports or hangers should be installed symmetrically and stress free in close proximity to the in- and outlet process connections.

Shut Off Devices

To conduct a system zero adjustment, shut off devices are required in the pipeline:

- in horizontal installation at the outlet,
- in vertical installation at the inlet.

When possible, shut off devices should be installed both up- and downstream from the flowmeter sensor.

Inlet Straight Sections

The mass meter does not require any flow conditioning inlet straight sections. Care should be exercised to ensure that any valves, gates, sight glasses, etc., do not cavitate and are not set into vibration by the flowmeter sensor.

System Design Information

- The presence of gas bubbles in the fluid can result in erroneous measurements, particularly in the density measurement. Therefore the flowmeter sensor should not be installed at the highest point in the system. Advantageous are installations in low pipeline sections, e. g., at the bottom of a U-section in the pipeline (invert).
- Long drop lines downstream from the flowmeter sensor should be avoided to prevent the meter tube from draining.
- Installation should be performed as stress free as possible.
- The flowmeter sensor should not come in contact with any other objects. Attachments to the housing are not permissible.
- When the cross-section of the connecting pipeline is larger than the flowmeter sensor size, suitable standard reducers should be installed.
- If strong vibrations exist in the pipeline, they should be damped using elastic pipeline elements. The damping devices must be installed beyond the supported flowmeter section and outside of the section between the shut off devices. The direct connection of flexible elements to the flowmeter sensor should be avoided.

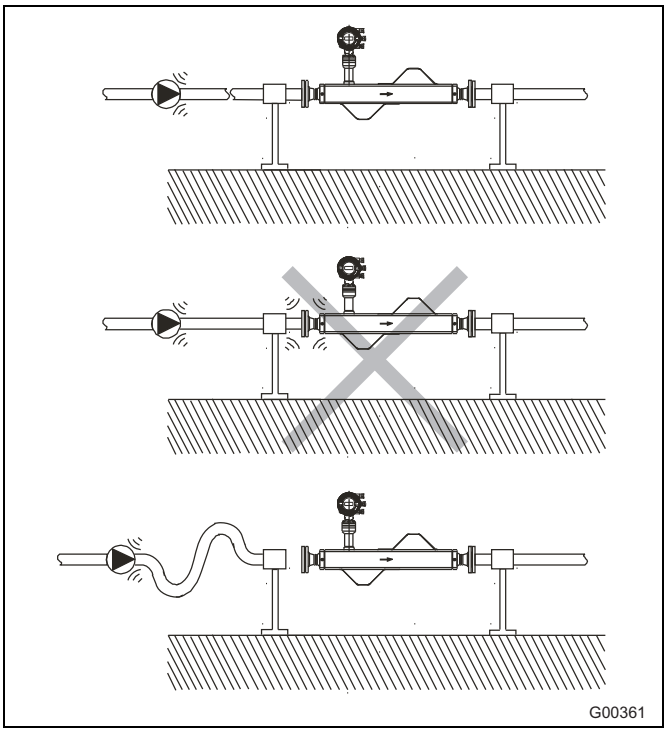

Fig. 3: Vibrations

- Care should be exercised to ensure that any dissolved gases, which may be present in many liquids, do not outgas. The back pressure at the outlet should be at least 0.2 bar (2.9 psi).
- Ensure that operation below the vapor pressure cannot occur when a vacuum exists in the meter tube.
- The flowmeter sensor should not be installed in the vicinity of strong electromagnetic fields, e. g., near motors, pumps, transformers etc.
- When operating more than one meter in one or multiple interconnected pipelines, the flowmeter primaries should be spaced distant from each other or the pipelines should be decoupled to prevent cross talk.
- Request information about special installation conditions for meter size "L".

Zero balance

In order to adjust the zero under operating conditions, it must be possible to reduce the flowrate "ZERO" while the meter tube remains completely filled. A bypass line is optimal when the process cannot be shut down. It is important for accurate measurements that during the zero adjustment there are no gas bubbles in the flowmeter sensor. It is also important that the pressure and temperature in the meter tube be the same as those which exists during operation.

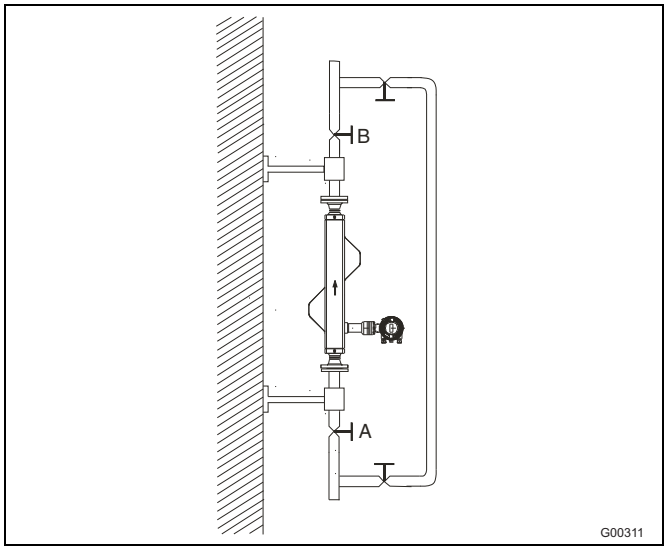

Fig. 4: Zero point adjustment with bypass line

2.1.2 Installation notes for FCM2000-MC2

Vertical installation position

The optimal installation orientation is a vertical installation with an upward flow as shown in Fig. 5. This has the advantage that any solids contained in the fluid will settle downward and any gas bubbles will move upward out of the meter tube when the flowrate is zero. Additionally, it is easy to drain the meter tube. Deposits can thereby be avoided.

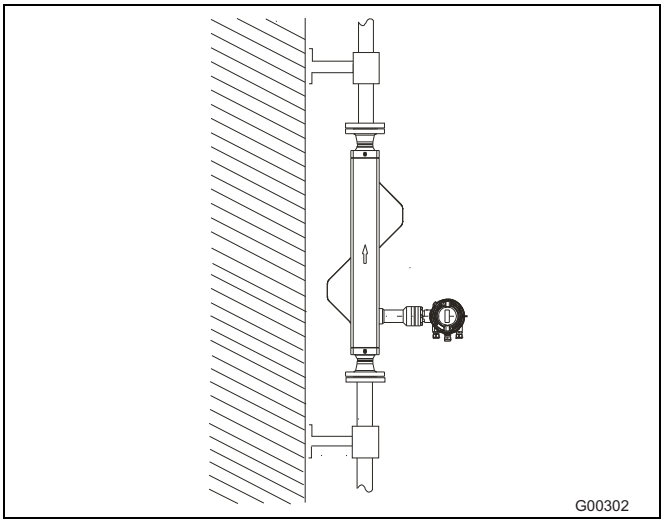

Fig. 5: Vertical installation position, self-draining (flow upwards)

Horizontal Installation Orientations

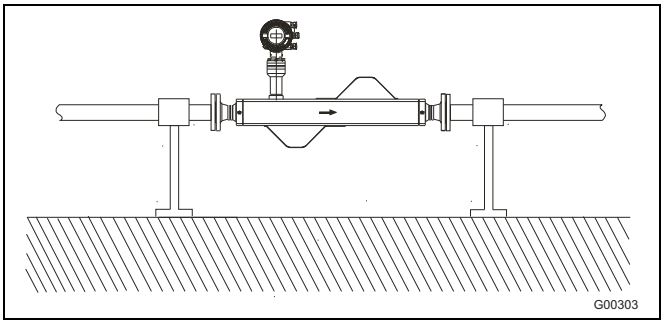

Fig. 6: Horizontal Installation Orientations

Horizontal Installations, Self Draining

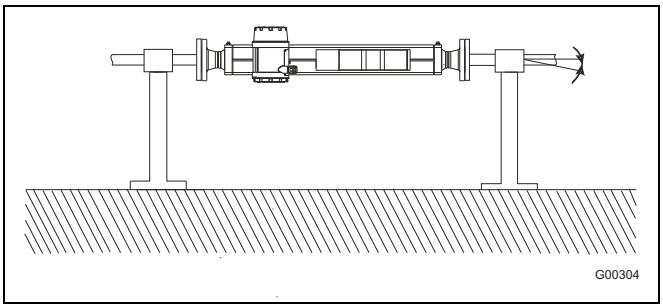

Fig. 7: Horizontal Installations, Self Draining, α 2 - 4°

Installation in a Drop Line

The installation recommendation shown in Fig. 8 is only permissible if a pipeline reduction or orifice with a smaller cross-section can be installed to prevent the flowmeter sensor from partially draining during the measurements.

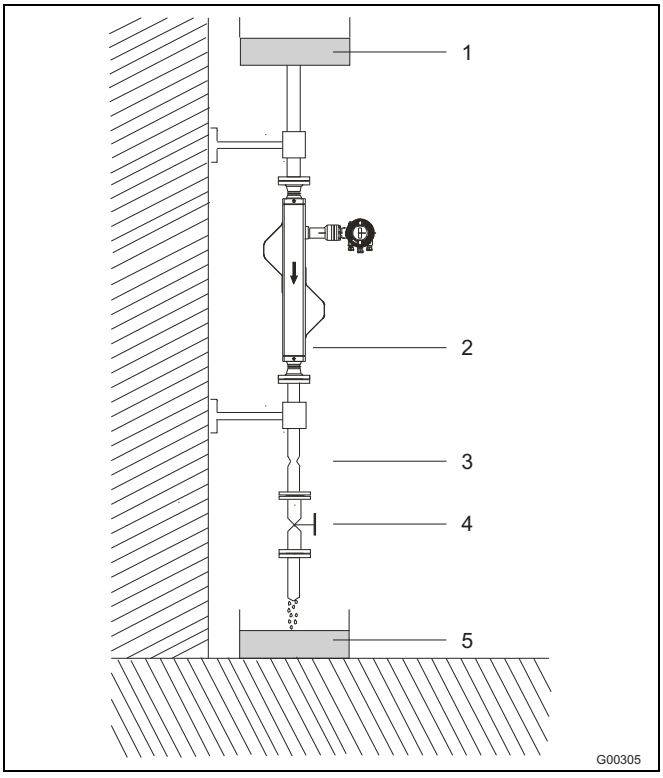

Fig. 8: Installation in a Drop Line

1 Supply reservoir
2 Flowmeter sensor
3 Orifice/pipe constriction
4 Valve
5 Product reservoir

Difficult Installation Conditions

The accumulation of air or gas bubbles in the meter pipe can lead to increased inaccuracies. Fig. Fig. 9 shows critical installation conditions.

Installations at the highest point in the pipeline (Figure A) can result in the formation of air pockets which can lead to appreciable inaccuracies.

Another difficult installation condition is immediately upstream of a free discharge (Figure B) in a drop line.

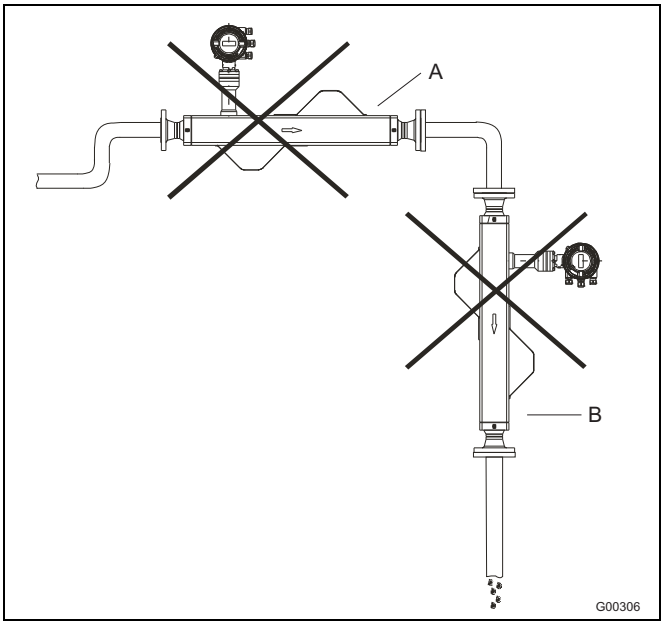

Fig. 9: Difficult Installation Conditions

Important:

Check whether the coordination flowmeter sensor and transmitter is correct. Compatible devices have the same end numbers, e. g., X001 and Y001 or X002 and Y002, on the type plate.

Pressure losses

The pressure losses, at the operating conditions, depends on the fluid and the actual flow. To calculate the pressure loss, the design program CD-CALC is provided.

2.1.3 Installation notes FCM2000-MS2

Installing the flowmeter sensor DN 1.5 (1/16”)

Horizontal installation is recommended. If vertical installation is required, a flow direction from below to above is recommended for better elimination of air bubbles. In order for air to be removed from the flowmeter sensor, the flow speed in the flowmeter sensor must be at least 1 m/s. If the fluid contains solid particles, especially in conjunction with too little flow, a level installation location of the flowmeter sensor and positioning of the input flange completely on top is recommended so that the particles can be more easily flushed out. In order to avoid a partial emptying of the flowmeter sensor, a sufficient back pressure must be present at the unit (min. 0.1 … 0.2 bar/(1.45...2.9 psi)).

- Install the flowmeter sensor in a vibration-free manner to a wall or a steel frame.
- Position the flowmeter sensor at a low location in the system in order to avoid a negative pressure in the flowmeter sensor, that could lead to air or gas separation in the fluid.
- Ensure that the flowmeter sensor is not run empty (in the normal operation) as this can lead to inaccurate measurements.

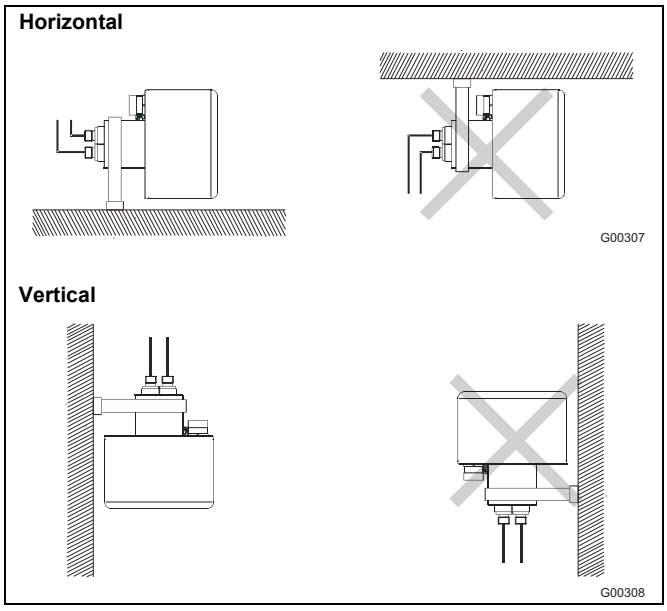

Fig. 10

High temperature version

In the high temperature design the multi-connection plug is separated from the sensor housing by a pipe. Thereby the plug can still be accessed even when the sensor is insulated.

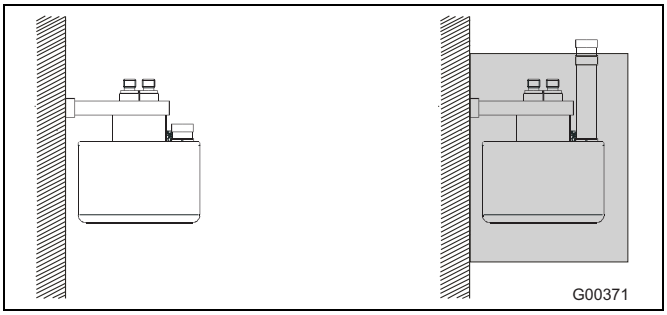

Fig. 11: Installation DN 1.5 (1/16“) – vertical

Important

If there are large differences between the fluid and ambient temperature the sensor must be insulated, to prevent two phase flow and accuracy effects. This is especially important for low flowrates.

The sensor must **always** be completely filled with homogeneous liquid or a single phase gas, otherwise the accuracy could be adversely affected.

For air/gas in volatile fluids horizontal installations are recommended.

The mounting bracket included with the shipment should always be used. The bracket should be secured to a wall or a steel framework (vibration free and mechanically stable).

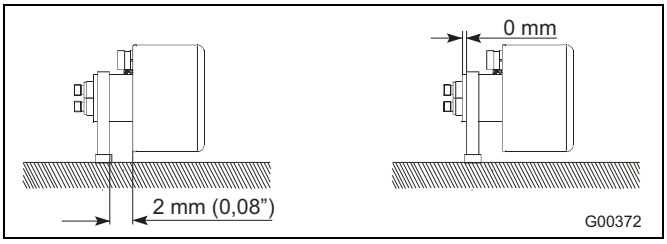

Fig. 12: Installation DN 1.5 (1/16“) – horizontal

Angle multi-connection plug, horizontal

To achieve optimum performance, the multi-connection plug is to be installed as shown in the figure. The multi-connection plug can be rotated within the angle noted.

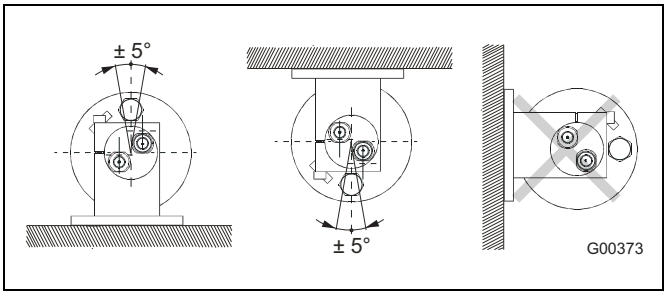

Fig. 13: Angle multi-connection plug – horizontal

Angle multi-connection plug, vertical

A specific orientation of the connection box is not prescribed for vertical installations, although the rotation of the sensor may not exceed the value shown.

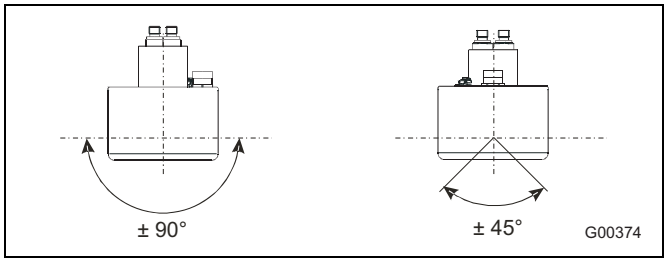

Fig. 14: Angle multi-connection plug – vertical

Installing flowmeter sensor DN3/DN6 (1/10 / 1/4")

A horizontal installation position is recommended for light flow, since air bubbles are easier to remove in this position. If the liquid is volatile or contains solid particles, vertical installation is not recommended.

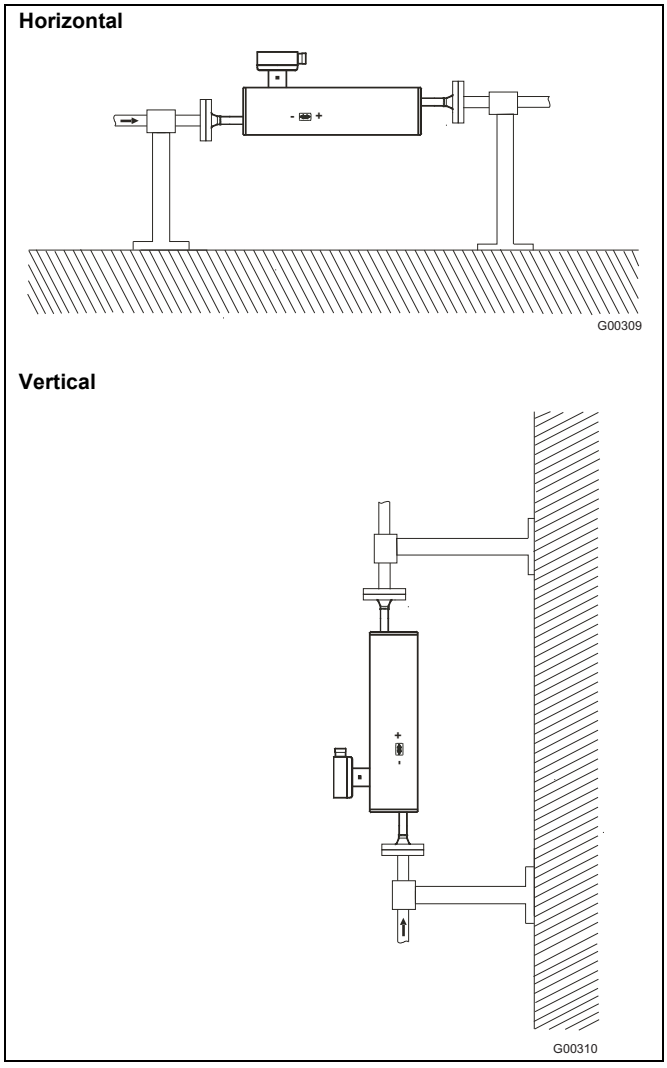

Fig. 15

3 Model FCM2000-MC2

3.1 Specifications

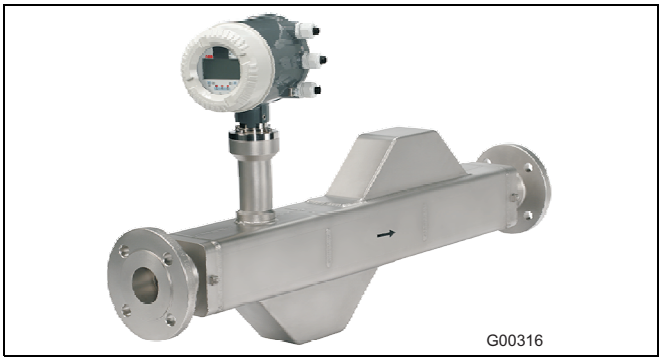

Fig. 16: FCM2000-MC2 flowmeter sensor

Nominal sizes
"E" (DN 20); "F" (DN 25); "G" (DN 40); "H" (DN 50);
"I" (DN 65); "J" (DN 80); "K" (DN 100); "L" (DN 150)

Measuring ranges for flowrate

Nominal size		Max. measuring range [Q_{max}] in [kg/min]
"E"	**DN 20 (3/4")**	0 ... 100
"F"	**DN 25 (1")**	0 ... 160
"G"	**DN 40 (1 1/2")**	0 ... 475
"H"	**DN 50 (2")**	0 ... 920
"I"	**DN 65 (2 1/2")**	0 ... 1,890
"J"	**DN 80 (3")**	0 ... 2,460
"K"	**DN 100 (4")**	0 ... 4,160
"L"	**DN 150 (6")**	0 ... 11,000

Protection class: IP 65/IP 67, NEMA 4X

Measured value deviation for flowrate DN 20 (3/4") to DN 65 (1.5") (sizes "E", "F", "G", "H", "I")
± 0.4 % of flow rate + 0.02 % of Q_{max}
± 0.25 % of flow rate + 0.02 % of Q_{max}
± 0.15 % of flow rate + 0.01 % of Q_{max}
± 0.1 % of flow rate + 0.01 % of Q_{max} (not for size "E")
(deviation from rate + zero error)

Measured value deviation for flowrate DN 80 (3") and DN 100 (4") (sizes "J", "K")
± 0.4 % of flow rate + 0.02 % of Q_{max}
± 0.25 % of flow rate + 0.02 % of Q_{max}
± 0.1 % of flow rate + 0.02 % of Q_{max}
± 0.15 % v. M. + 0.02 % v. Q_{max}
(deviation from rate + zero error)

Measured value deviation for flowrate DN 150 (6") (size "L")
± 0.4 % of flow rate ± 0.05 % of Q_{max}
± 0.25 % of flow rate ± 0.05 % of Q_{max}
± 0.15 % of flow rate ± 0.05 % of Q_{max}
± 0.1 % of flow rate ± 0.05 % of Q_{max}

Operating temperature effect
Less than ± 0.006 % of Q_{max}/1 K

Reproducibility of flowrate at rates > 5 % of Q_{max}
0.10 % of flow rate for nom. deviation ± 0.1 %
0.15 % of flow rate for nom. deviation ± 0.25 % and 0.4 %

Measuring range for density
0.5 ... 3.5 kg/dm^3

Measured value deviation for density
Standard calibration ± 5 g/l
Expanded density calibration ± 1 g/l

For separate designs, the signal cable is already calibrated and may not be either shortened or lengthened subsequently. The transmitter is calibrated accordingly and may not be changed.

Reproducibility of density
± 0.1 g/l

Measured value deviation for temperature
-50 ... 200 °C (-58 ... 392 °F) < 1 °K (1.8 °F)
For the precise temperatures for units with Ex approval, refer to the "Ex relevant specifications" section.

If the ambient temperature is below -20 °C (-4 °F), additional flowrate, density, and temperature deviations are to be expected.

3.1.1 Reference conditions

Calibration fluid
Water 25 °C (77 °F) (+ 5 K/- 5 K)
Pressure 0.5 ... 6 bar (7.3 ... 87.0 psi)

Ambient temperature
25 °C (77 °F) (+ 10 K/- 5 K)

Supply power
Line voltage as per name plate U_N ± 1 %

Warm-up phase
30 minutes

Installation according to this specification
No visible gas phase,
no external mechanical or hydraulic disturbances, particularly cavitation

Output calibration
Pulse output

Effect of the analog output on the measurement accuracy
Similar to pulse output ± 0.1 % of measured value

3.1.2 Materials and additional specifications

Flowmeter sensor materials
Parts in contact with fluid
- Stainless steel 1.4571/1.4308 (316Ti/CF8)
- Stainless steel 1.4435/316L
- Hastelloy C-4/2.4610
- With flowmeter sensor material 1.4435 cert. acc. to EHEDG
- Option: Manufactured acc. to NACE MR0175 (ISO 15156)

Housing
- Stainless steel 1.4301/1.4308 (304/CF8)

Transmitter materials
Housing
- Alloy casting, varnished
- Mid-section: RAL 7012
- Cover: RAL 9002
- Paint coat: 80 ... 120 µm thickness

Fluid temperature
Standard: -50 ... 200 °C (-58 ... 392 °F)
The relevant ambient temperatures for use in a potentially explosive area can be found in the corresponding chapter.

Ambient temperature
-20 ... 60 °C (-4 ... 140 °F); opt. -40 ... 60 °C (-40 ... 140 °F)
The relevant ambient temperatures for use in a potentially explosive area can be found in the corresponding chapter.

Process connections
Flange DIN/ASME
Tri-clamp DIN 32676 (ISO 2852)
- DN 15 ... DN 50 (1/2 ... 2"): series 3
- DN 65 ... DN 100 (2 1/2 ... 4"): series 1

Threaded pipe connection conforming to DIN 11851
The max. permissible operating pressure is determined by the respective process connection, the fluid temperature, the screws, and the gasket material.

Pressure rating
PN 16, PN 40, PN 100 (up to DN 80 [3"])
Cl 150, Cl 300, Cl 600 (up to DN 80 [3"])

Housing as protective device (optional)
Max. 40 bar (580 psi)

Pressure Equipment Directive 97/23/EC
Conformity assessment in accordance with Category III, fluid group 1, gas

Take into consideration the corrosion resistance of the meter tube materials as regards the measuring fluid.

EHEDG-approved unit versions
The appropriate installation conditions must be observed in order to achieve an installation that complies with hygiene requirements. The process connection/gasket combination created by the operator is particularly important too. Therefore, to ensure that the installation complies with hygiene requirements, only parts that conform to EHEDG stipulations (EHEDG Position Paper "Hygienic Process connections to use with hygienic components and equipment") may be used.

Material load for process connections

Process connection	Nominal size DN	PS_{max} [bar]	TS_{max} [°C]	TS_{min} [°C]
Threaded pipe connection conforming to DIN 11851	15 ... 40 (1/2 ... 1 1/2")	40	140	-40
	50 ... 100 (2 ... 4")	25	140	-40
Tri-Clamp conforming to DIN 32676	15 ... 50 (1/2 ... 2")	16	120	-40
	65 ... 100 (2 1/2 ... 4")	10	120	-40

3.1.3 Material load curves for flanged units

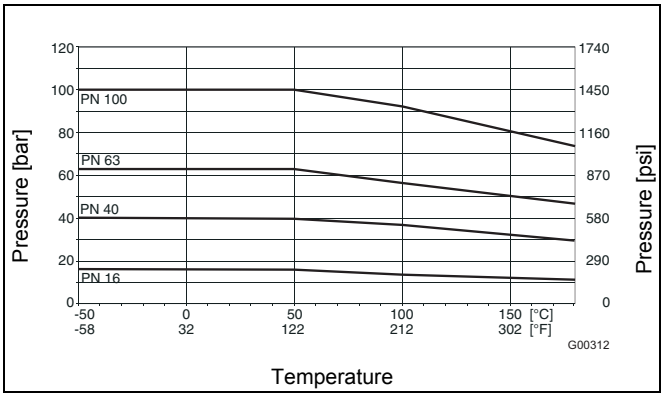

Fig. 17: DIN flange SS 1.4571 to DN 150 (6")

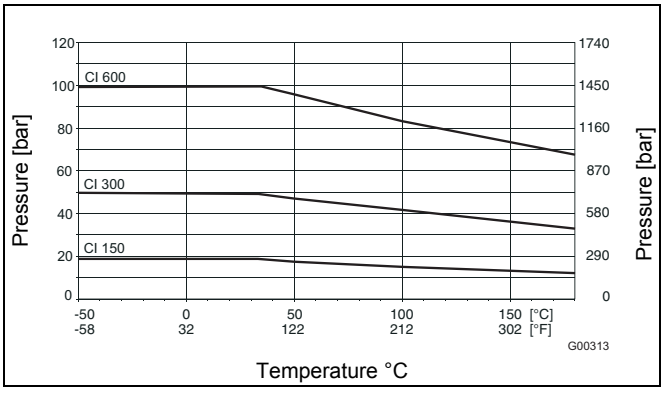

Fig. 18: ASME flange SS 1.4571 to DN 150 (6")

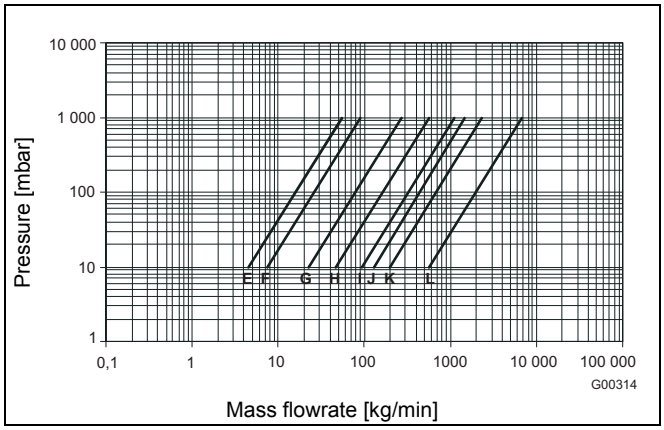

Fig. 19: Pressure loss curve FCM2000-MC2; measured with water, viscosity 1 mPa s

Viscosity range

Max. dyn. viscosity: ≤ 1 Pas (= 1,000 mPas = 1,000 cP)

At higher viscosities, please contact our ABB representatives.

3.2 Dimensions

3.2.1 Design MC21

Remote design, flanged construction "E" to "F", DIN/ASME

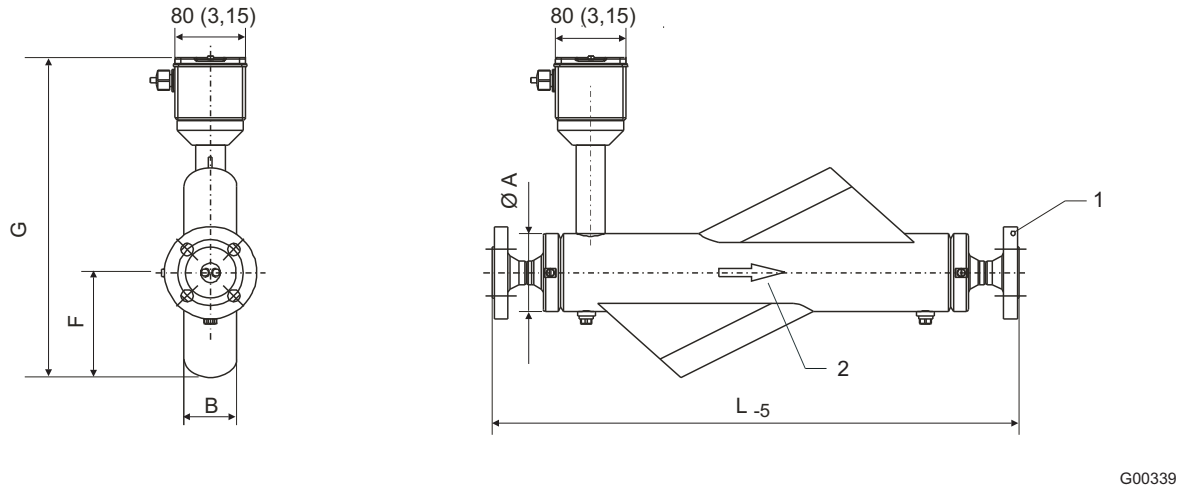

Fig. 20: Dimensions in mm (inch)

1 Flange DIN 2635 / ASME / ISO 7005 (connecting dimensions for ASME flanges acc. to ASME B16.5 (ANSI))
2 Flow direction

Meter size DN	Process connection	L_{-5}							G	F	B	Ø A	Weight kg (lb)
		DIN 2635 PN 40	DIN 2636 PN 64	DIN 2637 PN 100	ASME CL 150	ASME CL 300	ASME CL 600	DIN 11864-2 form A[1)]					
„E“ (20)	DN 15 (1/2“)	693 (27.28)	705 (27.76)	705 (27.76)	708 (27.87)	718 (28.27)	730 (28.74)	672 (26.46)	358 (14.09)	127 (5.00)	66 (2.60)	89 (3.50)	15 (33.1)
	DN 20 (3/4“)	598 (23.54)	–	–	618 (24.33)	628 (24.72)	645 (25.39)	583 (22.95)					15 (33.1)
	DN 25 (1“)	698 (27.48)	735 (28.94)	735 (28.94)	728 (28.66)	738 (29.06)	753 (29.65)	683 (26.89)					16 (35.3)
„F“ (25)	DN 20 (3/4“)	758 (29.84)	–	–	778 (30.63)	788 (31.02)	802 (31.57)	743 (29.25)	358 (14.09)	127 (5.00)	66 (2.60)	89 (3.50)	16 (35.3)
	DN 25 (1“)	658 (25.91)	693 (27.28)	693 (27.28)	688 (27.09)	698 (27.48)	710 (27.95)	643 (25.31)					16 (35.3)
	DN 40 (1 1/2“)	808 (31.81)	840 (33.07)	840 (33.07)	838 (32.99)	855 (33.66)	868 (34.17)	786 (30.94)					19 (41.9)

All dimensions in mm (inch)

1) Antiseptic grooved flange DIN 11864-2, form A, for pipes acc. to DIN 11866

Remote design, flanged construction "G" to "L", DIN/ASME

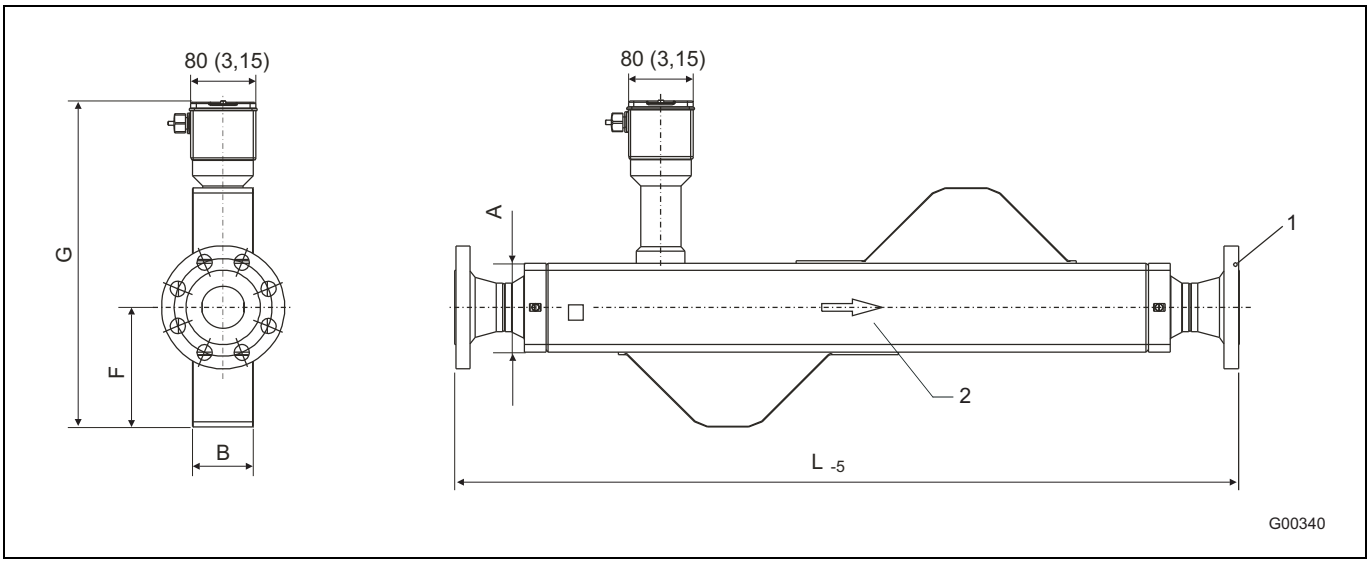

Fig. 21: Dimensions in mm (inch)

1 Flange DIN 2635 / ASME B16.5 / ISO 7005 (connecting dimensions for ASME flanges acc. to ASME B16.5 (ANSI))

2 Flow direction

Meter size DN	Process connection	L_{-5}								G	F	B	A	Wt. kg (lb)
		DIN 2633 PN 16	DIN 2635 PN 40	DIN 2636 PN 64	DIN 2637 PN 100	ASME CL 150	ASME CL 300	ASME CL 600	DIN 11864-2 form A[1)]					
„G“ (40)	DN 25 (1“)		879 (34.61)	914 (35.98)	914 (35.98)	910 (35.83)	922 (36.30)	932 (36.69)	864 (34.02)	374 (14.72)	129 (5.08)	64 (2.52)	90 (3.54)	20 (44.1)
	DN 40 (1 1/2“)		780 (30.71)	813 (32.01)	813 (32.01)	810 (31.89)	825 (32.48)	843 (33.19)	761 (29.96)					22 (48.5)
	DN 50 (2“)		940 (37.01)	967 (38.07)	979 (38.54)	970 (38.19)	980 (38.58)	1001 (39.41)	918 (36.14)					23 (50.7)
„H“ (50)	DN 40 (1 1/2“)		1045 (41.14)	1078 (42.44)	1078 (42.44)	1075 (42.32)	1090 (42.91)	1108 (43.62)	1025 (40.35)	403 (15.87)	148 (5.83)	80 (3.15)	110 (4.33)	32 (70.5)
	DN 50 (2“)		940 (37.01)	967 (38.07)	979 (38.54)	970 (38.19)	980 (38.58)	1001 (39.41)	918 (36.14)					34 (75.0)
	DN 65 (2 1/2“)		1100 (43.31)	1132 (44.57)	1148 (45.20)	1218 (47.95)	1228 (48.35)	1248 (49.13)	1081 (42.56)					38 (83.8)
„I“ (65)	DN 50 (2“)		1220 (48.03)	1248 (49.13)	1259 (49.57)	1250 (49.21)	1260 (49.61)	1281 (50.43)	1197 (47.13)	429 (16.89)	164 (6.46)	97 (3.82)	130 (5.12)	43 (94.8)
	DN 65 (2 1/2“)		1100 (43.31)	1132 (44.57)	1148 (45.20)	1218 (47.95)	1228 (48.35)	1249 (49.17)	1081 (42.56)					48 (105.8)
	DN 80 (3“)		1220 (48.03)	1248 (49.13)	1260 (49.61)	1240 (48.82)	1260 (49.61)	1282 (50.47)	1200 (47.24)					50 (110.2)
„J“ (80)	DN 65 (2 1/2“)		1330 (52.36)	1362 (53.62)	1378 (54.25)	1365 (53.74)	1375 (54.13)	1396 (54.96)	1310 (51.57)	456 (17.95)	186 (7.32)	108 (4.25)	140 (5.51)	56 (123.5)
	DN 80 (3“)		1220 (48.03)	1248 (49.13)	1260 (49.61)	1240 (48.82)	1260 (49.61)	1282 (50.47)	1200 (47.24)					58 (127.9)
	DN 100 (4“)	1450 (57.09)	1480 (58.27)	1494 (58.82)	1530 (60.24)	1500 (59.06)	1520 (59.84)	1568 (61.73)	1463 (57.60)					69 (152.1)
„K“ (100)	DN 80 (3“)		1640 (64.57)	1668 (65.67)	1680 (66.14)	1660 (65.35)	1680 (66.14)	1702 (67.01)	1618 (63.70)	500 (19.69)	215 (8.46)	131 (5.16)	170 (6.69)	84 (185.2)
	DN 100 (4“)	1450 (57.09)	1480 (58.27)	1494 (58.82)	1530 (60.24)	1500 (59.06)	1520 (59.84)	1568 (61.73)	1463 (57.60)					91 (200.6)
	DN 150 (6“)	1736 (68.35)	1776 (69.92)	1816 (71.50)	–	1806 (71.10)	1826 (71.89)	–	–					120 (264.6)
„L“ (150)	DN 150 (6“)	2000 (78.74)	2040 (80.31)	2080 (81.89)	–	2070 (81.50)	2090 (82.28)	–	–	613 (24.13)	285 (11.22)	190 (7.48)	250 (9.84)	240 (529.1)

All dimensions in mm (inch)

1) Antiseptic grooved flange DIN 11864-2, form A, for pipes acc. to DIN 11866

Dimensions, remote design, food industry fitting "E" to "F", DIN 11851

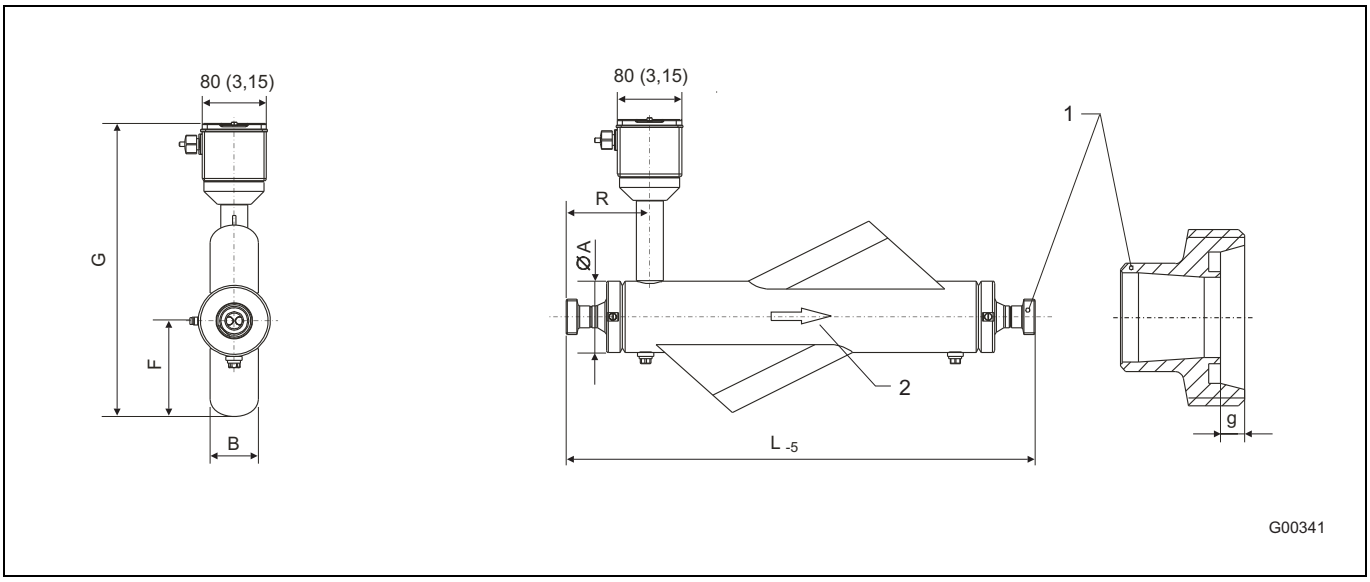

Fig. 22: Dimensions in mm (inch)

1 Food industry fitting acc. to DIN 11851 (threaded connector)
2 Flow direction

Meter Size DN	Process connection		L_{-5}	g	G	F	B	Ø A	R	Weight kg (lb)
	DN 15 / 1/2"	Rd 34 x 1/8	672 (26.46)	4 (0.16)					152 (5.98)	
"E" (20)	DN 20 / 3/4"	Rd 44 x 1/6	583 (22.95)	6 (0.24)	358 (14.09)	127 (5.00)	66 (2.60)	89 (3.50)	102 (4.02)	13 (28.7)
	DN 25 / 1"	Rd 52 x 1/6	683 (26.89)	7 (0.28)					152 (5.98)	
	DN 20 / 3/4"	Rd 44 x 1/6	743 (29.25)	6 (0.24)					162 (6.38)	
"F" (25)	DN 25 / 1"	Rd 52 x 1/6	643 (25.31)	7 (0.28)	358 (14.09)	127 (5.00)	66 (2.60)	89 (3.50)	112 (4.41)	14 (30.9)
	DN 40 / 1/2"	Rd 65 x 1/6	786 (30.94)	7 (0.28)					185 (7.28)	

All dimensions in mm (inch)

If this connection is supplied with an EHEDG-certified device,
the device nominal sizes must correspond with the connection nominal sizes!

Remote design, food industry fitting "G" to "K", DIN 11851

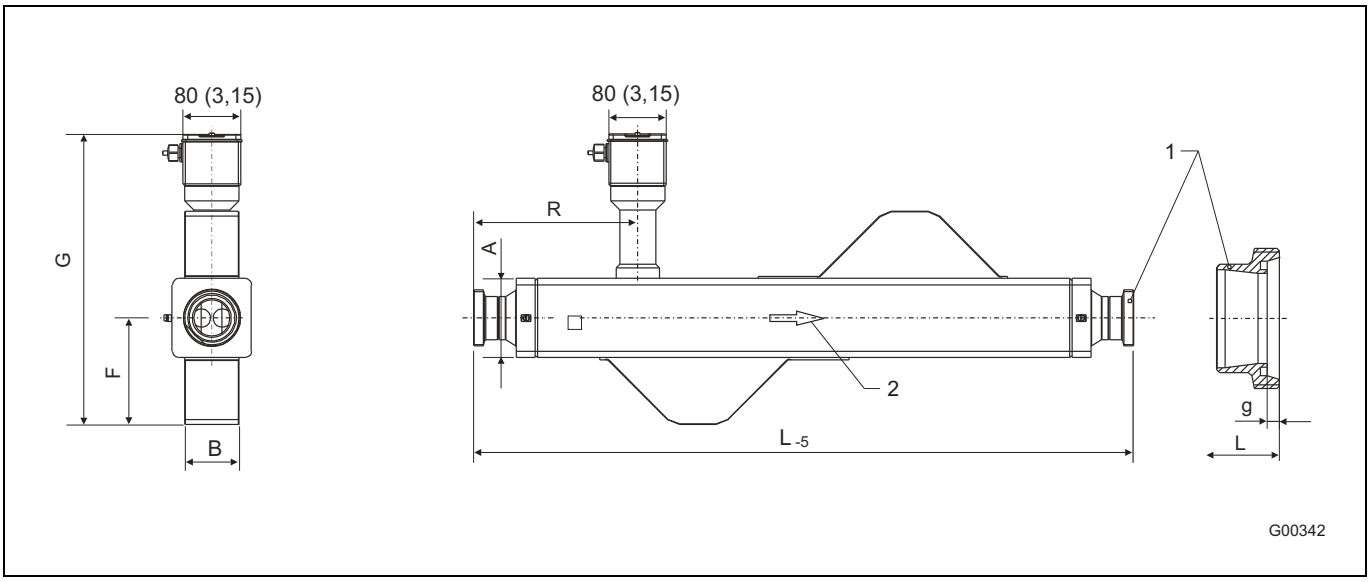

Fig. 23: Dimensions in mm (inch)

1 Food industry fitting acc. to DIN 11851 (threaded connector)
2 Flow direction

Meter Size DN	Process connection		L_{-5}	g	G	F	B	A	R	Weight kg (lb)
	DN 25 / (1")	Rd 52 x 1/6	864 (34.02)	7 (0.28)					218 (8.58)	16 (35.3)
„G“ (40)	DN 40 / (1 1/2")	Rd 65 x 1/6	761 (29.96)	7 (0.28)	374 (14.72)	129 (5.08)	64 (2.52)	90 (3.54)	164 (6.46)	18 (39.7)
	DN 50 / (2")	Rd 78 x 1/6	918 (36.14)	7 (0.28)					241 (9.49)	19 (41.9)
	DN 40 / (1 1/2")	Rd 65 x 1/6	1025 (40.35)	7 (0.28)					233 (9.17)	28 (61.7)
„H“ (50)	DN 50 / (2")	Rd 78 x 1/6	918 (36.14)	7 (0.28)	403 (15.87)	148 (5.83)	80 (3.15)	110 (4.33)	177 (6.97)	30 (66.1)
	DN 65 / (2 1/2")	Rd 95 x 1/6	1081 (42.56)	8 (0.31)					254 (10.00)	34 (75.0)
	DN 50 / (2")	Rd 78 x 1/6	1197 (47.13)	7 (0.28)					291 (11.46)	40 (88.2)
„I“ (65)	DN 65 / (2 1/2")	Rd 95 x 1/6	1081 (42.56)	8 (0.31)	429 (16.89)	164 (6.46)	97 (3.82)	130 (5.12)	227 (8.94)	44 (97.0)
	DN 80 / (3")	Rd 110 x 1/4	1200 (47.24)	8 (0.31)					281 (11.06)	47 (103.6)
	DN 65 / (2 1/2")	Rd 95 x 1/6	1310 (51.57)	8 (0.31)					319 (12.56)	54 (119.0)
„J“ (80)	DN 80 / (3")	Rd 110 x 1/4	1205 (47.44)	8 (0.31)	456 (17.95)	186 (7.32)	108 (4.25)	140 (5.51)	258 (10.16)	56 (123.5)
	DN 100 / (4")	Rd 130 x 1/4	1463 (57.60)	10 (0.39)					381 (15.00)	60 (132.3)
„K“ (100)	DN 80 / (3")	Rd 110 x 1/4	1618 (63.70)	8 (0.31)	500 (19.69)	215 (8.46)	131 (5.16)	170 (6.69)	401 (15.79)	82 (180.8)
	DN 100 / (4")	Rd 130 x 1/4	1463 (57.60)	10 (0.39)					314 (12.36)	86 (189.6)

All dimensions in mm (inch)

If this connection is supplied with an EHEDG-certified device,
the device nominal sizes must correspond with the connection nominal sizes!

Remote design, tri-clamp "E" to "F", DIN 32676 (ISO 2852)

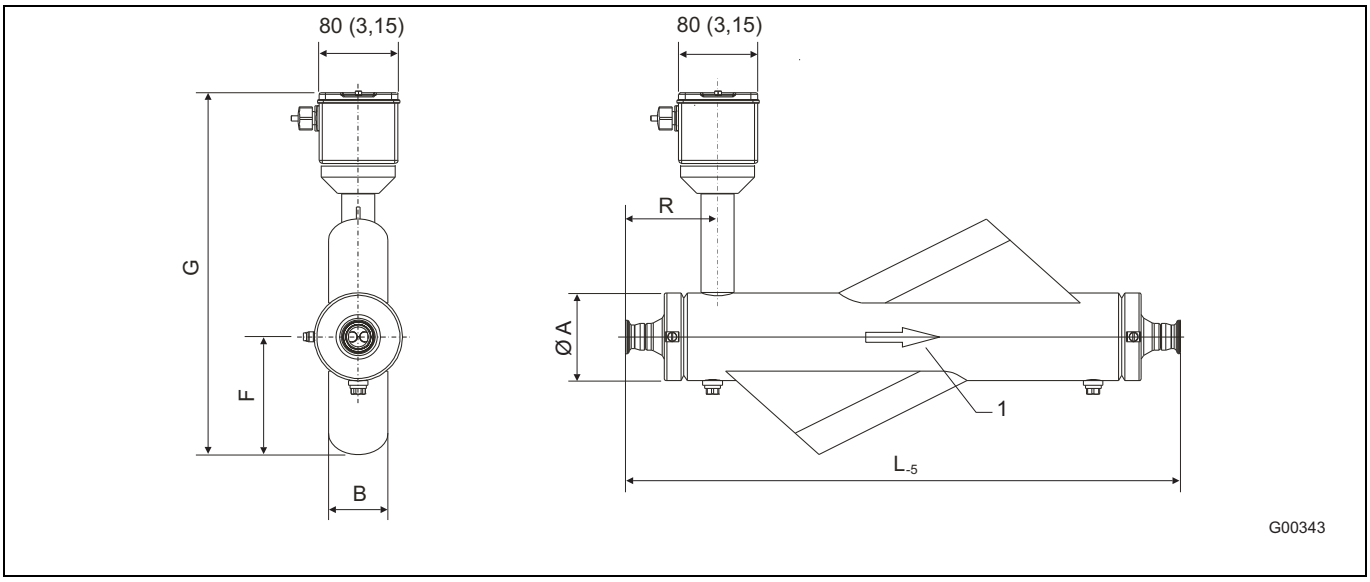

Fig. 24: Dimensions in mm (inch)

1 Flow direction

Meter Size DN	Process connection		L_{-5}	G	F	B	Ø A	R	Weight kg (lb)
„E“ (20)	DN 15 (1/2) DN 20 (3/4“) DN 25 (1“)	DIN 32676	656 (25.83) 561 (22.09) 661 (26.02)	358 (14.09)	127 (5.00)	66 (2.60)	89 (3.50)	140 (5.51) 92 (3.62) 142 (5.59)	12 (26.5)
„F“ (25)	DN 20 (3/4“) DN 25 (1“) DN 40 (1 1/2“)	DIN 32676	721 (28.39) 621 (24.45) 773 (30.43)	358 (14.09)	127 (5.00)	66 (2.60)	89 (3.50)	152 (5.98) 102 (4.02) 180 (7.09)	13 (28.7)

All dimensions in mm (inch)

If this connection is supplied with an EHEDG-certified device,
the device nominal sizes must correspond with the connection nominal sizes!

Remote design, tri-clamp "G" to "K", DIN 32676 (ISO 2852)

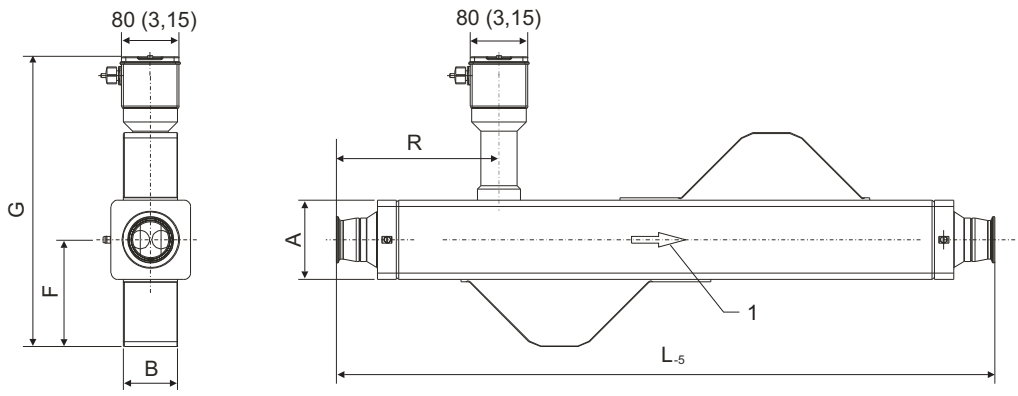

Fig. 25: Dimensions in mm (inch)

1 Flow direction

Meter Size DN	Process connection fitting		L_{-5} ± 3	G	F	B	A	R	Weight kg (lb)
	DN 25	(1“)	842 (33.15)					242 (9.53)	17 (37.5)
„G“ (40)	DN 40	(1 1/2“)	748 (29.45)	374 (14.72)	129 (5.08)	64 (2.52)	90 (3.54)	195 (7.68)	17 (37.5)
	DN 50	(2“)	913 (35.94)					278 (10.94)	18 (39.7)
	DN 40	(1 1/2“)	1012 (39.84)					275 (10.83)	27 (59.5)
„H“ (50)	DN 50	(2“)	913 (35.94)	403 (15.87)	148 (5.83)	80 (3.15)	110 (4.33)	225 (8.86)	26 (57.3)
	DN 65	(2 1/2“)	1073 (42.24)					305 (12.01)	27 (59.5)
	DN 50	(2“)	1192 (46.93)					335 (13.19)	36 (79.4)
„I“ (65)	DN 65	(2 1/2“)	1073 (42.24)	429 (16.89)	164 (6.46)	97 (3.82)	130 (5.12)	275 (10.83)	37 (81.6)
	DN 80	(3“)	1180 (46.46)					328 (12.91)	38 (83.8)
	DN 65	(2 1/2“)	1302 (51.26)					378 (14.88)	45 (99.2)
„J“ (80)	DN 80	(3“)	1180 (46.46)	456 (17.95)	186 (7.32)	108 (4.25)	140 (5.51)	296 (11.65)	44 (97.0)
	DN 100	(4“)	1448 (57.01)					430 (16.93)	46 (101.4)
„K“ (100)	DN 80	(3“)	1598 (62.91)	500 (19.69)	215 (8.46)	131 (5.16)	170 (6.69)	440 (17.32)	71 (156.5)
	DN 100	(4“)	1448 (57.01)					365 (14.37)	69 (152.1)

All dimensions in mm (inch)

If this connection is supplied with an EHEDG-certified device,
the device nominal sizes must correspond with the connection nominal sizes!

3.2.2 Design MC23 / MC26 / MC27 compact design or remote Ex design

Flanged construction "E" to "F", DIN/ASME

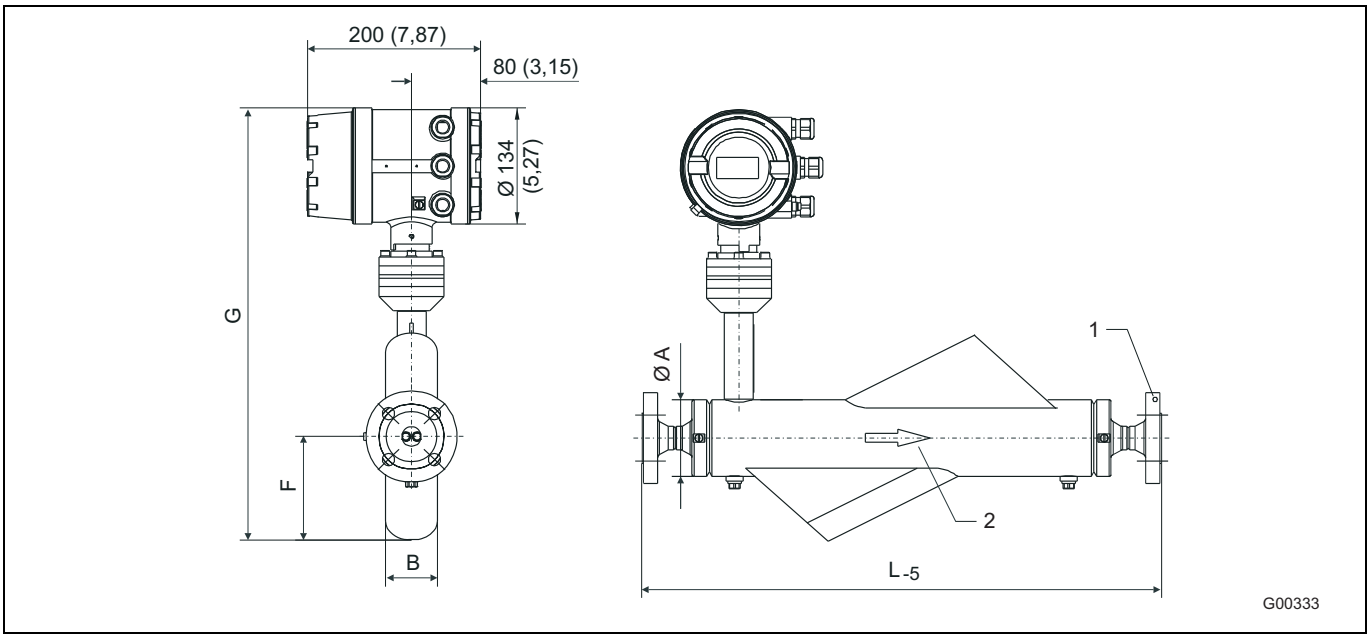

Fig. 26: Dimensions in mm (inch)

1 Flange DIN 2635 / ASME B16.5 / ISO 7005 (connecting dimensions for ASME flanges acc. to ASME B16.5 (ANSI))

2 Flow direction

Meter Size DN	A	F	B	G		Process connection DN	L_{-5}							Weight kg (lb)
				MC23	MC26/ MC27		DIN 2635 PN 40	DIN 2636 PN 64	DIN 2637 PN 100	ASME CL 150	ASME CL 300	ASME CL 600	DIN 11864-2 form A[1)]	
20 („E“)	89 (3.50)	127 (5)	66 (2.60)	470 (18.50)	494 (19.45)	15 (1/2”)	693 (27.28)	705 (27.76)	705 (27.76)	708 (27.87)	718 (28.27)	730 (28.74)	672 (26.46)	16
						20 (3/4”)	598 (23.54)	–	–	618 (24.33)	628 (24.72)	645 (25.39)	583 (22.95)	16
						25 (1”)	698 (27.48)	735 (28.94)	735 (28.94)	728 (28.66)	738 (29.06)	753 (29.65)	683 (26.89)	17
25 („F“)	89 (3.50)	127 (5)	66 (2.60)	470 (18.50)	494 (19.45)	20 (3/4”)	758 (29.84)	–	–	778 (30.63)	788 (31.02)	802 (31.57)	743 (29.25)	17
						25 (1”)	658 (25.91)	693 (27.28)	693 (27.28)	688 (27.09)	698 (27.48)	710 (27.95)	643 (25.31)	17
						40 (1 1/2”)	808 (31.81)	840 (33.07)	840 (33.07)	838 (32.99)	855 (33.66)	868 (34.17)	786 (30.94)	20

All dimensions in mm (inch)

1) Antiseptic grooved flange DIN 11864-2, form A, for pipes acc. to DIN 11866

Flanged construction "G" to "L", DIN/ASME

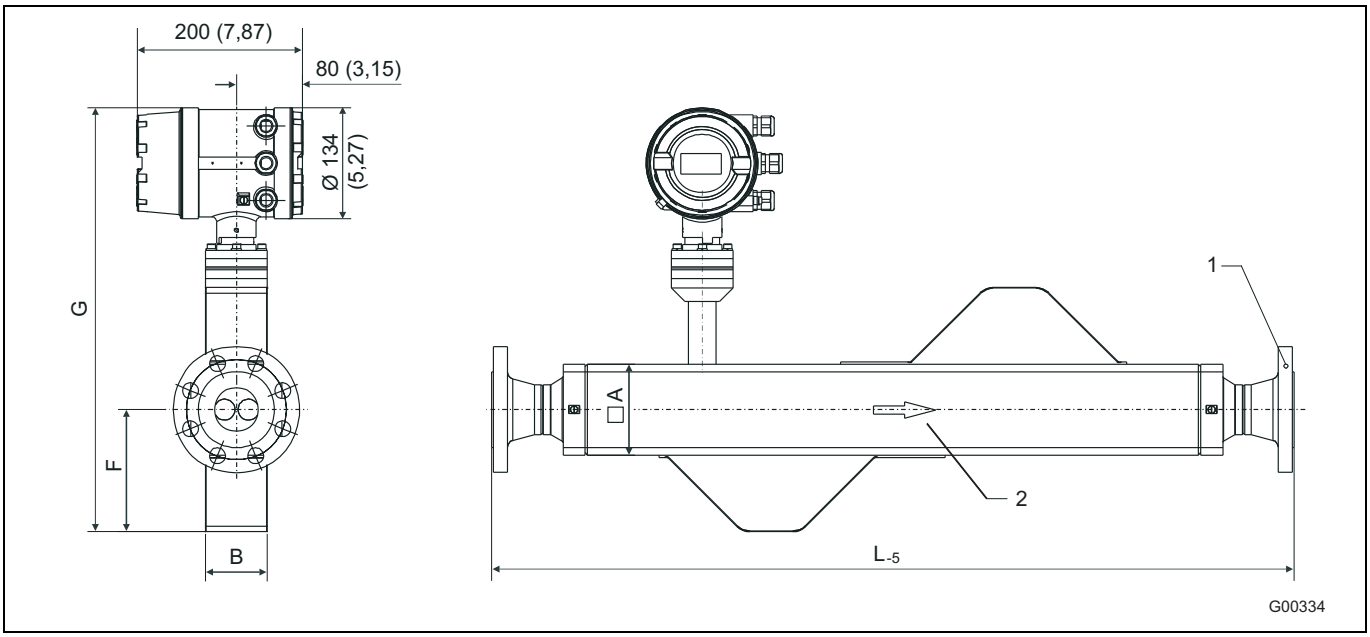

Fig. 27: Dimensions in mm (inch)

1 Flange DIN 2635 / ASME B16.5 / ISO 7005 (connecting dimensions for ASME flanges acc. to ASME B16.5 (ANSI))

2 Flow direction

Meter Size DN	A	F	B	G		Process conn. DN	L_{-5}								Weight kg (lb)
				MC23	MC26/ MC27		DIN 2633 PN 16	DIN 2635 PN 40	DIN 2636 PN 64	DIN 2637 PN 100	ASME CL 150	ASME CL 300	ASME CL 600	DIN 11864-2 form A[1)]	
40 („G“)	90 (3.54)	129 (5.08)	64 (2.52)	486 (19.13)	511 (20.12)	25 (1”)		879 (34.61)	914 (35.98)	914 (35.98)	910 (35.83)	922 (36.30)	932 (36.69)	864 (34.02)	21 (46.3)
						40 (1 1/2”)		780 (30.71)	813 (32.01)	813 (32.01)	810 (31.89)	825 (32.48)	843 (33.19)	761 (29.96)	23 (50.7)
						50 (2”)		940 (37.01)	967 (38.07)	979 (38.54)	970 (38.19)	980 (38.58)	1001 (39.41)	918 (36.14)	24 (52.9)
50 („H“)	110 (4.33)	148 (5.83)	80 (3.15)	515 (20.28)	540 (21.26)	40 (1 1/2”)		1045 (41.14)	1078 (42.44)	1078 (42.44)	1075 (42.32)	1090 (42.91)	1108 (43.62)	1025 (40.35)	33 (72.8)
						50 (2”)		940 (37.01)	967 (38.07)	979 (38.54)	970 (38.19)	980 (38.58)	1001 (39.41)	918 (36.14)	35 (77.2)
						65 (2 1/2”)		1100 (43.31)	1132 (44.57)	1148 (45.20)	1218 (47.95)	1228 (48.35)	1248 (49.13)	1081 (42.56)	39 (86.0)
65 („I“)	130 (5.12)	164 (6.46)	97 (3.82)	541 (21.30)	566 (22.28)	50 (2”)		1220 (48.03)	1248 (49.13)	1259 (49.57)	1250 (49.21)	1260 (49.61)	1281 (50.43)	1197 (47.13)	44 (97.0)
						65 (2 1/2”)		1100 (43.31)	1132 (44.57)	1148 (45.20)	1218 (47.95)	1228 (48.35)	1249 (49.17)	1081 (42.56)	49 (108.0)
						80 (3”)		1220 (48.03)	1248 (49.13)	1260 (49.61)	1240 (48.82)	1260 (49.61)	1282 (50.47)	1200 (47.24)	51 (112.4)
80 („J“)	140 (5.51)	186 (7.32)	108 (4.25)	568 (22.36)	593 (23.35)	65 (2 1/2”)		1330 (52.36)	1362 (53.62)	1378 (54.25)	1365 (53.74)	1375 (54.13)	1396 (54.96)	1310 (51.57)	57 (125.7)
						80 (3”)		1220 (48.03)	1248 (49.13)	1260 (49.61)	1240 (48.82)	1260 (49.61)	1282 (50.47)	1200 (47.24)	59 (130.1)
						100 (4”)	1450 (57.09)	1480 (58.27)	1494 (58.82)	1530 (60.24)	1500 (59.06)	1520 (59.84)	1568 (61.73)	1463 (57.60)	70 (154.3)
100 („K“)	170 (6.69)	215 (8.46)	131 (5.16)	612 (24.09)	637 (25.08)	80 (3”)		1640 (64.57)	1668 (65.67)	1680 (66.14)	1660 (65.35)	1680 (66.14)	1702 (67.01)	1618 (63.70)	85 (187.4)
						100 (4”)	1450 (57.09)	1480 (58.27)	1494 (58.82)	1530 (60.24)	1500 (59.06)	1520 (59.84)	1568 (61.73)	1463 (57.60)	92 (202.8)
						150 (6“)	1736 (68.35)	1776 (69.92)	1816 (71.50)	–	1806 (71.10)	1826 (71.89)	–	–	120 (264.6)
150 („L“)	250 (9.84)	285 (11.22)	190 (7.48)	725 (28.54)	750 (29.53)	150 (6”)	2000 (78.74)	2040 (80.31)	2080 (81.89)	–	2070 (81.50)	2090 (82.28)	–	–	240 (529.1)

All dimensions in mm (inch)

1) Antiseptic grooved flange DIN 11864-2, form A, for pipes acc. to DIN 11866

Food industry fitting "E" to "F", DIN 11851

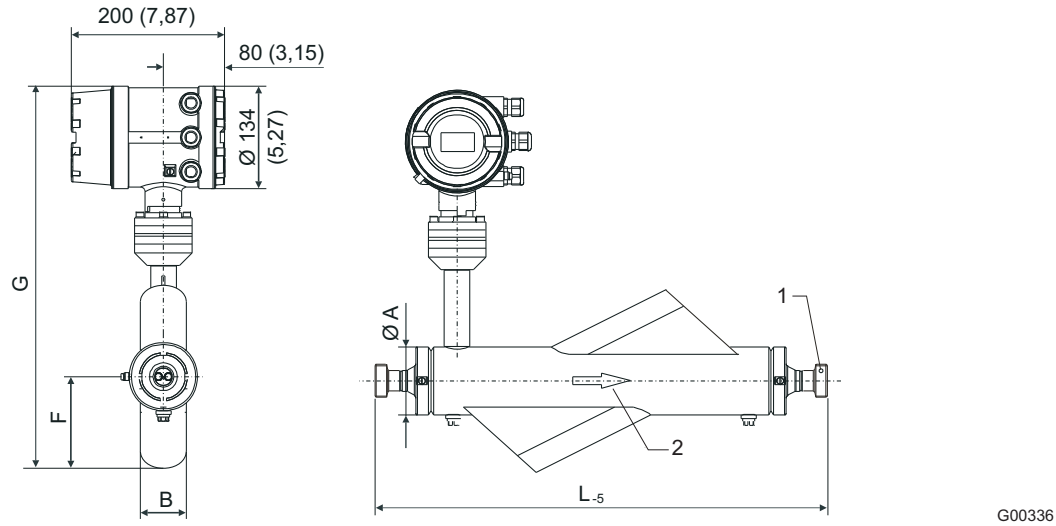

Fig. 28: Dimensions in mm (inch)

1 Food industry fitting acc. to DIN 11851 (threaded connector)
2 Flow direction

Meter Size DN	A	F	B	G		Process connection DN	L_{-5}	Weight appr. kg (lb)
				MC23	MC26 / MC27		DIN 11851	
20 („E“)	89 (3.50)	127 (5.00)	66 (2.60)	470 (18.50)	494 (19.45)	15 (1/2“)	672 (26.46)	14 (30.9)
						20 (3/4“)	583 (22.95)	
						25 (1“)	683 (26.89)	
25 („F“)	89 (3.50)	127 (5.00)	66 (2.60)	470 (18.50)	494 (19.45)	20 (3/4“)	743 (29.25)	15 (33.1)
						25 (1“)	643 (25.31)	
						40 (1 1/2“)	786 (30.94)	

All dimensions in mm (inch)

If this connection is supplied with an EHEDG-certified device,
the device nominal sizes must correspond with the connection nominal sizes!

Food industry fitting "G" to "K", DIN 11851

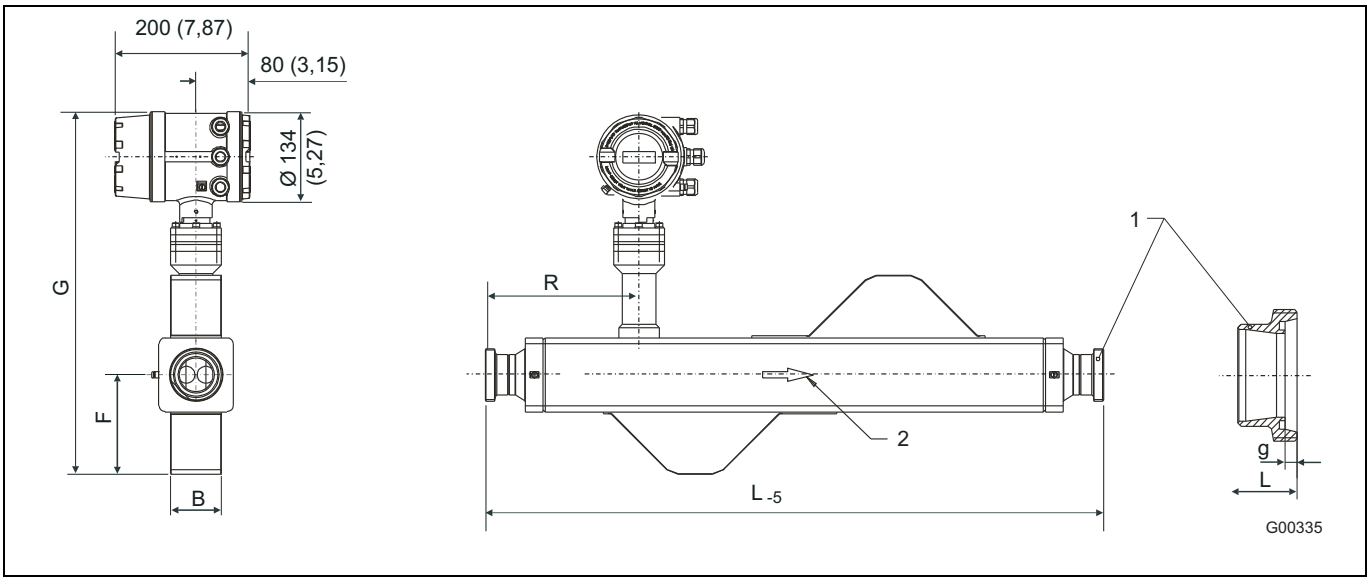

Fig. 29: Dimensions in mm (inch)

1 Food industry fitting acc. to DIN 11851 (threaded connector)
2 Flow Direction

Meter Size DN	A	F	B	G		Process connection DN	L_{-5}	g	M	R	Weight appr kg (lb)
				MC23	MC26/ MC27						
40 („G“)	90 (3.54)	129 (5.08)	64 (2.52)	486 (19.13)	511 (20.12)	25 (1”)	864 (34.02)	7 (0.28)	Rd 52 x 1/6	218 (8.58)	21 (46.3)
						40 (1 1/2”)	61 (29.96)	7 (0.28)	Rd 65 x 1/6	164 (6.46)	23 (50.7)
						50 (2”)	918 (36.14)	7 (0.28)	Rd 78 x 1/6	241 (9.49)	24 (52.9)
50 („H“)	110 (4.33)	148 (5.83)	80 (3.15)	515 (20.28)	540 (21.26)	40 (1 1/2”)	1025 (40.35)	7 (0.28)	Rd 65 x 1/6	233 (9.17)	33 (72.8)
						50 (2”)	918 (36.14)	7 (0.28)	Rd 78 x 1/6	177 (6.97)	35 (77.2)
						65 (2 1/2”)	1081 (42.56)	8 (0.31)	Rd 95 x 1/6	254 (10.00)	39 (86.0)
65 („I“)	130 (5.12)	164 (6.46)	97 (3.82)	541 (21.30)	566 (22.28)	50 (2”)	1197 (47.13)	7 (0.28)	Rd 78 x 1/6	291 (11.46)	44 (97.0)
						65 (2 1/2”)	1081 (42.56)	8 (0.31)	Rd 95 x 1/6	227 (8.94)	48 (105.8)
						80 (3”)	1200 (47.24)	8 (0.31)	Rd 110 x 1/4	281 (11.06)	51 (112.4)
80 („J“)	140 (5.51)	186 (7.32)	108 (4.25)	568 (22.36)	593 (23.35)	65 (2 1/2”)	1310 (51.57)	8 (0.31)	Rd 95 x 1/6	319 (12.56)	57 (125.7)
						80 (3”)	1200 (47.24)	8 (0.31)	Rd 110 x 1/4	258 (10.16)	59 (130.1)
						100 (4”)	1463 (57.60)	10 (0.39)	Rd 130 x 1/4	381 (15.00)	70 (154.3)
100 („K“)	170 (6.69)	215 (8.46)	131 (5.16)	612 (24.09)	637 (25.08)	80 (3”)	1618 (63.70)	8 (0.31)	Rd 110 x 1/4	401 (15.79)	85 (187.4)
						100 (4”)	1463 (57.60)	10 (0.39)	Rd 130 x 1/4	314 (12.36)	92 (202.8)

All dimensions in mm (inch)

If this connection is supplied with an EHEDG-certified device,
the device nominal sizes must correspond with the connection nominal sizes!

Tri-clamp "E" to "F", DIN 32676 (ISO 2852)

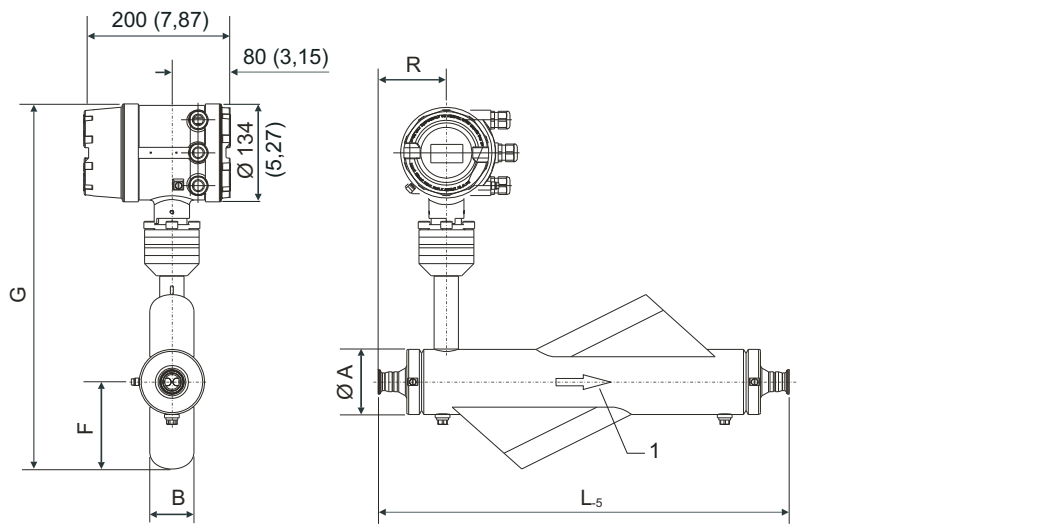

Fig. 30: Dimensions in mm (inch)

1 Flow direction

Meter Size DN	A	F	B	G		Process connection DN	L-5	R	Weight appr kg (lb)
				MC23	MC26/ MC27				
20 („E“)	89 (3.50)	127 (5.00)	66 (2.60)	470 (18.50)	494 (19.45)	15 (1/2“)	656 (25.83)	140 (5.51)	14 (30.9)
						20 (3/4“)	561 (22.09)	92 (3.62)	
						25 (1“)	661 (26.02)	142 (5.59)	
25 („F“)	89 (3.50)	127 (5.00)	66 (2.60)	470 (18.50)	494 (19.45)	20 (3/4“)	721 (28.39)	152 (5.98)	15 (33.1)
						25 (1“)	621 (24.45)	102 (4.02)	
						40 (1 1/2“)	773 (30.43)	180 (7.09)	

All dimensions in mm (inch)

If this connection is supplied with an EHEDG-certified device,
the device nominal sizes must correspond with the connection nominal sizes!

Tri-clamp "G" to "K", DIN 32676 (ISO 2852)

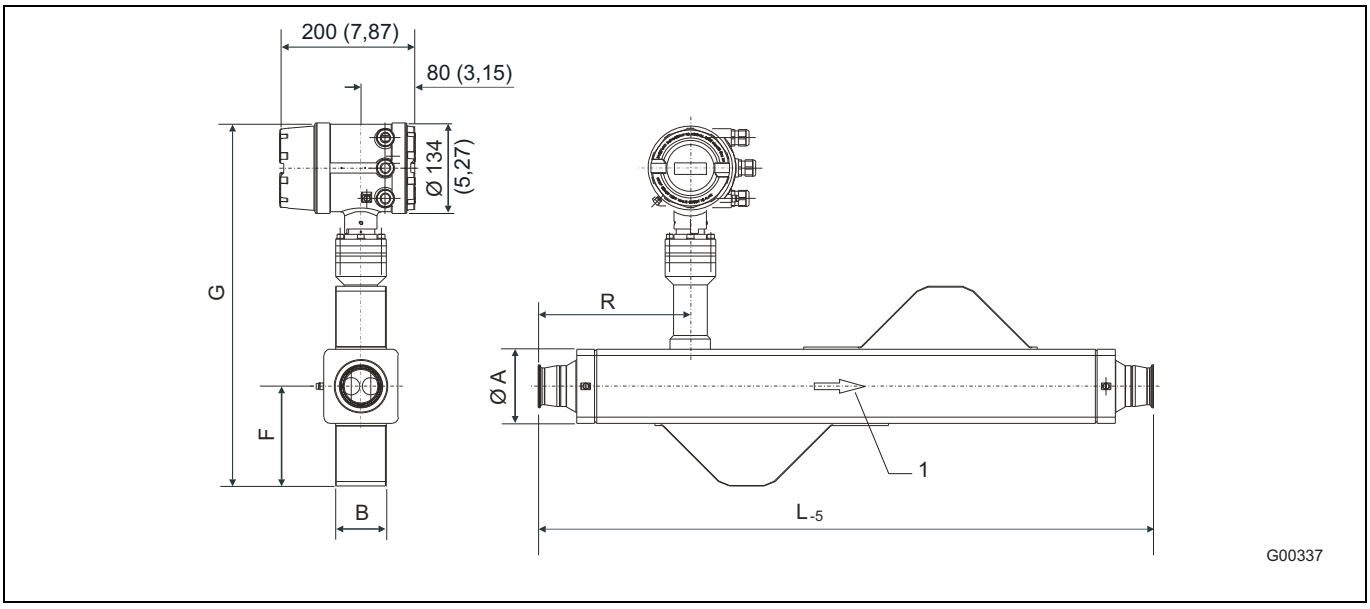

Fig. 31: Dimensions in mm (inch)

1 Flow direction

Meter Size DN	A	F	B	G		Process connection DN	L_{-5}	R	Weight appr kg (lb)
				MC23	MC26/ MC27				
40 („G“)	90 (3.54)	129 (5.08)	64 (2.52)	486 (19.13)	511 (20.12)	25 (1”)	842 (33.15)	242 (9.53)	17 (37.5)
						40 (1 1/2”)	748 (29.45)	195 (7.68)	17 (37.5)
						50 (2”)	913 (35.94)	278 (10.94)	18 (39.7)
50 („H“)	110 (4.33)	148 (5.83)	80 (3.15)	515 (20.28)	540 (21.26)	40 (1 1/2”)	1012 (39.84)	275 (10.83)	27 (59.5)
						50 (2”)	913 (35.94)	225 (8.86)	26 (57.3)
						65 (2 1/2”)	1073 (42.24)	305 (12.01)	27 (59.5)
65 („I“)	130 (5.12)	164 (6.46)	97 (3.82)	541 (21.30)	566 (22.28)	50 (2”)	1192 (46.93)	335 (13.19)	36 (79.4)
						65 (2 1/2”)	1073 (42.24)	275 (10.83)	37 (81.6)
						80 (3”)	1180 (46.46)	328 (12.91)	38 (83.8)
80 („J“)	140 (5.51)	186 (7.32)	108 (4.25)	568 (22.36)	593 (23.35)	65 (2 1/2”)	1302 (51.26)	378 (14.88)	45 (99.2)
						80 (3”)	1180 (46.46)	296 (11.65)	44 (97.0)
						100 (4”)	1448 (57.01)	430 (16.93)	46 (101.4)
100 („K“)	170 (6.69)	215 (8.46)	131 (5.16)	612 (24.09)	637 (25.08)	80 (3”)	1598 (62.91)	440 (17.32)	71 (156.5)
						100 (4”)	1448 (57.01)	365 (14.37)	69 (152.1)

All dimensions in mm (inch)

If this connection is supplied with an EHEDG-certified device,
the device nominal sizes must correspond with the connection nominal sizes!

3.3 Ordering information

Separate sensor and integral mount version, DN 15 ... DN 150 (1/2 ... 6")

	Main order number																			Additional order no.
Version number	1 - 3	4	5	6	7	8	9	10	11	12	13	14	15	16	17	18	19	20		
CoriolisMaster mass flowmeter	**FCM2000 MC2**	**X**	**X**	**X**	**X**	**X**	X	X	X	X	X	X	X	X	X	X	X	X		XX
Design																				
Remote mount, ATEX, IECEx Zone 2, FM Div. 2		1																		
Integral mount, ATEX, IECEx Zone 2, FM Div. 2		**3**																		
Remote mount, ATEX, IECEx Zone 1, FM Div. 1		6																		
Integral mount, ATEX, IECEx Zone 1, FM Div. 1		7																		
Explosion protection/Cable gland/Ambient temperature																				
None/cable gland M20 x 1.5/standard			**A**																	
None/cable gland NPT 1/2 in./standard			T																	
None/cable gland M20 x 1.5/extended -40 ... 60 °C (-40 ... 140 °F)		1)	U																	
None/cable gland NPT 1/2 in. /extended -40 ... 60 °C (-40 ... 140 °F)		1)	X																	
ATEX, IECEx Zone 1/cable gland M20 x 1.5/standard		2)	B																	
ATEX, IECEx Zone 2/cable gland M20 x 1.5/standard		3)	M																	
ATEX, IECEx Zone 1/M20 x 1.5/extended -40 ... 60 °C (-40 ... 140 °F)		4)	E																	
ATEX, IECEx Zone 2/M20 x 1.5/extended -40 ... 60 °C (-40 ... 140 °F)		2)	N																	
FMus Class I, Div.1, Zone 1/cable gland NPT 1/2 in./standard		4)	C																	
FMus Class I, Div. 2, Zone 2/cable gland NPT 1/2 in./standard		3)	O																	
FMus Class I, Div. 1, Zone 1/NPT 1/2 in. /extended -40 ... 60 °C (-40 ... 140 °F)		4)	Y																	
FMus Class I, Div. 2, Zone 2/NPT 1/2 in. /extended -40 ... 60 °C (-40 ... 140 °F)		1)	V																	
cFM Class I, Div. 1, Zone 1/NPT 1/2 in./standard		2)	D																	
cFM Class I, Div. 2, Zone 2/NPT 1/2 in./standard		3)	P																	
cFM Class I, Div. 1, Zone 1/NPT 1/2 in. /extended -40 ... 60 °C (-40 ... 140 °F)		4)	Q																	
cFM Class I, Div. 2, Zone 2/NPT 1/2 in. /extended -40 ... 60 °C (-40 ... 140 °F)		1)	W																	
Certificates																				
Standard				**1**																
Material certificate 3.1 to EN 10204				2																
Material certificate 3.1 to EN 10204 and pressure test to AD-2000				3																
Pressure test to AD-2000				4																
NACE material certificate				5																
NACE certificate + pressure test				6																
Meter tube material																				
Stainless steel					**1**															
1.4435 (AISI 316L SST) EHEDG version				5)	3															
Hastelloy C-4 (2.4610)				6)	4															
Measuring range/Max. measuring range/Size/DN nominal																				
0 ... 75 kg/min (0 ... 165 lbs/min)/"E"/DN 20 (3/4 in.)						**E**														
0 ... 125 kg/min (0 ... 275 lbs/min)/"F"/DN 25 (1 in.)						F														
0 ... 365 kg/min (0 ... 803 lbs/min)/"G"/DN 40 (1-1/2 in.)						G														
0 ... 710 kg/min (0 ... 1562 lbs/min)/"F"/DN 50 (2 in.)						H														
0 ... 1,450 kg/min (0 ... 3190 lbs/min)/"I"/DN 65 (2-1/2 in.)						I														
0 ... 1,890 kg/min (0 ... 4158 lbs/min)/"J"/DN 80 (3 in.)						J														
0 ... 3,200 kg/min (0 ... 7040 lbs/min)/"K"/DN 100 (4 in.)						K														
0 ... 8,500 kg/min (0 ... 18,700 lbs/min)/"L"/DN 150 (6 in.)						L														

Continued on next page

1) For MC23 only.
2) For MC26/MC27 only.
3) For MC21/MC23 only.
4) For MC2 only.
5) Only with process connection DIN 11851 or Tri-Clamp and size E ... J.
6) Only with DIN PN 40/ASME CL 150 and size E ... K.

	Version number	1 - 3	4	5	6	7	8	9	10	11	12	13	14	15	16	17	18	19	20	Additional order no.
			Main order number																	
CoriolisMaster mass flowmeter	**FCM2000**	**MC2**	X	X	X	X	X	**X**	**X**	**X**	**X**	**X**	**X**	**X**	**X**	**X**	X	X	X	XX
Process connection nominal diameter																				
DN 15 (1/2 in.)							7)	1	5											
DN 20 (3/4 in.)							7)	**2**	**0**											
DN 25 (1 in.)							7)	2	5											
DN 40 (1-1/2 in.)							7)	4	0											
DN 50 (2 in.)							7)	5	0											
DN 65 (2-1/2 in.)							7)	6	5											
DN 80 (3 in.)							7)	8	0											
DN 100 (4 in.)							7)	1	H											
DN 150 (6 in.)							7)	1	F											
Process connection type																				
Flange DIN PN 16										D										
Flange DIN PN 40										**F**										
Flange DIN PN 64										G										
Flange DIN PN 100									8)	H										
Flange ASME 150										P										
Flange ASME 300										Q										
Flange ASME 600									8)	R										
Aseptic flange conforming to DIN 11864-2 form A for pipes conforming										N										
Tri-Clamp conforming to DIN 32676									9)	U										
Threaded pipe connection conforming to DIN 11851									9)	V										
Housing (flowmeter sensor)																				
Standard											1									
Housing as protective device, 40 bar (565 psi)										9)	2									
Heating/Cooling																				
None												**1**								
Calibration																				
Forward flow +/- 0.40 % of flow rate/density (+/- 5 g/l)													A							
Forward flow +/- 0.25 % of flow rate/density (+/- 5 g/l)													B							
Forward flow +/- 0.15 % of flow rate/density (+/- 5 g/l)													C							
Forward flow +/- 0.1 % of flow rate/density (+/- 5 g/l)												10)	M							
Forward flow +/- 0.40 % of flow rate/density (+/- 1 g/l)												9)	D							
Forward flow +/- 0.25 % of flow rate/density (+/- 1 g/l)												9)	E							
Forward flow +/- 0.15 % of flow rate/density (+/- 1 g/l)												9)	F							
Forward flow +/- 0.1 % of flow rate/density (+/- 1 g/l)												11)	N							
Forward/reverse flow +/- 0.40 % of flow rate/density (+/- 5 g/l)													G							
Forward/reverse flow +/- 0.25 % of flow rate/density (+/- 5 g/l)													H							
Forward/reverse flow +/- 0.15 % of flow rate/density (+/- 5 g/l)													I							
Forward/reverse flow +/- 0.1 % of flow rate/density (+/- 5 g/l)												10)	O							
Forward/reverse flow +/- 0.40 % of flow rate/density (+/- 1 g/l)												9)	J							
Forward/reverse flow +/- 0.25 % of flow rate/density (+/- 1 g/l)												9)	K							
Forward/reverse flow +/- 0.15 % of flow rate/density (+/- 1 g/l)												9)	L							
Forward/reverse flow +/- 0.1 % of flow rate/density (+/- 1 g/l)												11)	P							
Name plate																				
German													12)	G						
English														E						
Design level																				
(Specified by ABB)															X					
Operating mode/Software version																				
Not selected (only for remote mount flowmeter sensors)																X				
Standard software (mass and density measurement)																A				
Standard software plus concentration measurement (DensiMass)																C				

Continued on next page

7) Possible combinations of measuring range and process connection nominal diameter: See data sheet.
8) Not for sizes "K" und "L".
9) Not for size "L" (DN 150 [6 in.]).
10) Not for size "E" (DN 20 [3/4 in.])
11) Not for size "L" (DN 150 [6 in.]) or "E" (DN 20 [3/4 in.]).
12) Not for devices without Ex approval.

	Main order number																		Additional order no.
Version number	1 - 3	4	5	6	7	8	9	10	11	12	13	14	15	16	17	18	19	20	
CoriolisMaster mass flowmeter FCM2000	**MC2**	X	X	X	X	X	X	X	X	X	X	X	X	X	X	**X**	**X**	**X**	**XX**
Outputs																			
Current output I (active), current output II (passive), pulse output (active) [Ex not possible]															13)	A			
Current output I (active), current output II (passive), pulse output (passive)																B			
Current output I (passive, "ia"), current output II (passive, "ia"), pulse output (passive, "ia")															14)	D			
Not selected/fieldbus (only for remote mount flowmeter sensors)																X			
Communication																			
Not selected (only for remote mount flowmeter																			
None																	0		
HART protocol																	1		
PROFIBUS PA																	3		
FOUNDATION Fieldbus																	5		
PROFIBUS PA with M12 plug																15)	7		
Power supply																			
Not selected (only for remote mount flowmeter																			
100 ... 230 V AC																		G	
24 V AC/DC																		K	
Signal cable length																			
Zero in the case of integral mount version																		16)	C0
5 m (16 ft.) with ME21																		16)	C1
10 m (33 ft.) with ME21																		16)	C2
20 m (66 ft.) with ME21																		16)	C3
25 m (82 ft.) with ME21																		16)	C4
50 m (164 ft.) with ME21																		16)	C5
10 m (33 ft.) with ME26																		17)	C6
Language of documentation																			
German																			M1
English																			M5
Western Europe/Scandinavia language package (languages: DE, EN, DA, ES, FR, IT, NL, PT, FI, SV)																			MW
Eastern Europe language package (languages: DE, EL, CS, ET, LV, LT, HU, PL, SK, SL, RO, BG)																			ME
Other																			MZ

FCM2000-MC2 signal cable, price per meter	D173D146U01

13) Not for MC27.
14) Only for ATEx, IECEx Zone 1 or FM Div. 1 and with "ia" outputs.
15) Not with MC26/MC27.
16) With ME21 only.
17) With ME26 only.

4 Model FCM2000-MS2

4.1 Specifications

Fig. 32: FCM2000-MS2 flowmeter sensor

Nominal sizes
"S" (DN 1.5); "T" (DN 3); "U" (DN 6)

Measuring ranges for flowrate

Nominal size		Max. measuring range [Q_{max}] in [kg/h]
"S"	**DN 1.5 (1/16")**	0 ... 65
"T"	**DN 3 (1/10")**	0 ... 250
"U"	**DN 6 (1/4")**	0 ... 1000

Protection class: IP 65

Measured value deviation for flowrate
± 0.4 % of flow rate ± 0.02 % of Q_{max}
± 0.25 % of flow rate ± 0.02 % of Q_{max}
± 0.15 % of flow rate ± 0.01 % of Q_{max}
(deviation from rate + zero error)

Reproducibility of flowrate
0.1 % of flow rate for nom. deviation ± 0.15 %
0.15 % of flow rate for nom. deviation ± 0.25 % and 0.4 %

Measuring range for density
0.5 ... 3.5 kg/dm^3

Measured value deviation for density
Standard calibration ± 10 g/l
Temperature range 0 ... 100 °C (32 ... 212 °F)
Expanded density calibration available upon request

Measured value deviation for temperature
-50 ... 180 °C (-58 ... 356 °F) < 1 °K (1.8 °F)

Reference conditions

Calibration fluid
Water 25 °C (77 °F) (+ 5 K/- 5 K)
Pressure 0.5 ... 6 bar (7.3 ... 87.0 psi)

Ambient temperature
25 °C (77 °F) (+ 10 K/- 5 K)

Supply power
Line voltage as per name plate U_N ± 1 %

Warm-up phase
30 minutes

Installation according to this specification
No visible gas phase
No external mechanical or hydraulic disturbances, particularly cavitation

Output calibration
Pulse output

Effect of the analog output on the measurement accuracy
Similar to pulse output ± 0.1 % of measured value

Materials and additional specifications

Sensor materials
Parts in contact with fluid
1.4435/316L
Housing 1.4404

Fluid temperature
Standard:
-50 ... 180 °C (-58 ... 356 °F): DN 3 (1/10"), DN 6 (1/4")
-50 ... 125 °C (-58 ... 257 °F): DN 1.5 (1/16")
-50 ... 180 °C (-58 ... 356 °F): DN 1.5 (1/16") (optional)
For information about the design for operation in potentially explosive areas, refer to the corresponding chapter.

Ambient temperature
-20 ... 50 °C (-4 ... 122 °F)
For information about the design for operation in potentially explosive areas, refer to the corresponding chapter.

Process connections
G1/4" ISO 228-1
1/4" NPT ASME B1.201
Flange DIN/ASME for DN 6 (1/4")
Threaded pipe connection conforming to DIN 11851 for DN 6 (1/4")
Tri-Clamp conforming to DIN 32676 (ISO 2852) for DN 6 (1/4")
The max. permissible operating pressure is determined by the respective process connection, the fluid temperature, the screws, and the gasket material.

Pressure rating
Flange PN 40, PN 100, Cl 150, Cl 600
Thread G 1/4", 1/4" NPT, PN 100 ... PN 410 (for each option)

Installation
For more detailed instructions regarding installation, refer to the operating instructions.

Pressure loss curves

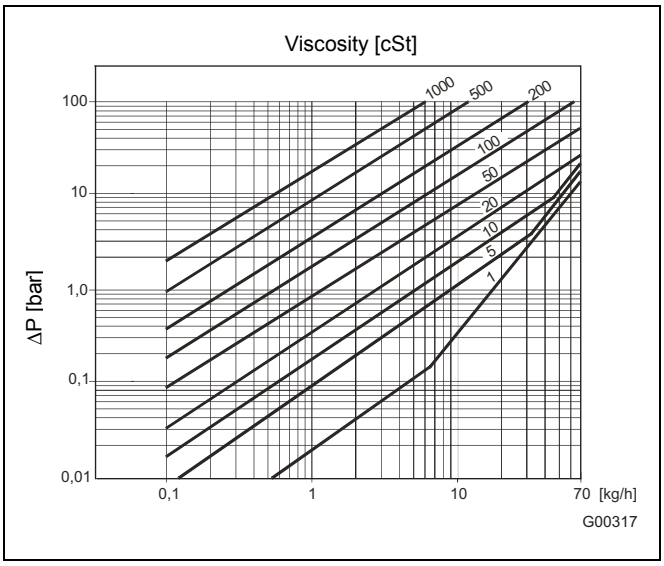

Fig. 33: Pressure losses MS21, DN 1.5 (1/16")

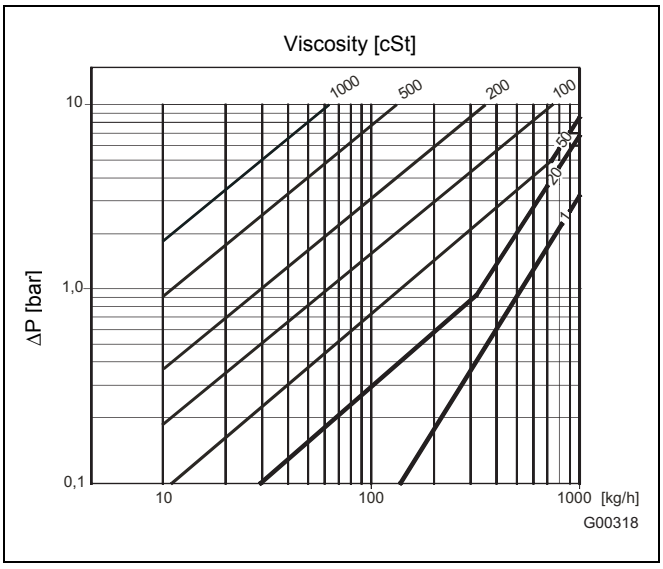

Fig. 35: Pressure losses MS21, DN 6 (1/4")

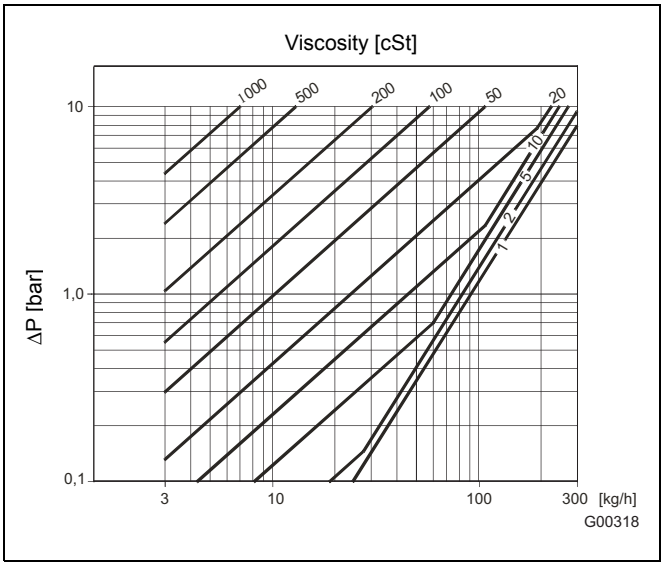

Fig. 34: Pressure losses MS21, DN 3 (1/10")

4.2 Dimensions

4.2.1 Design MS21

Remote design DN 3 ... DN 6 (1/10 ... 1/4“)

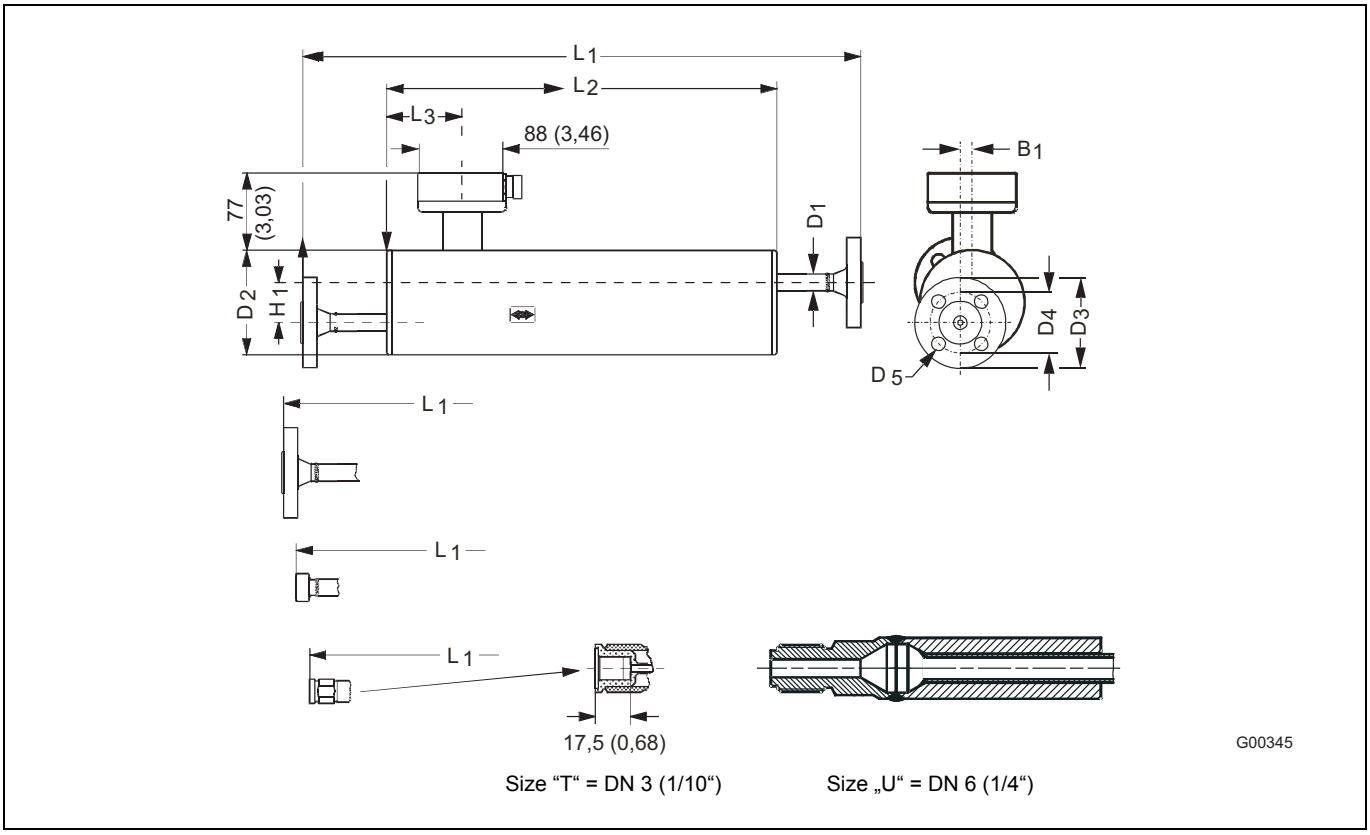

Fig. 36: Dimensions in mm (inch)

Nom. size DN	Connections			L1	L2	L3	H1	B1	D1	D2	D3	D4	D5	Weight appr. kg (lb)
	Type	Pressure PN	Size											
3 (1/10“)	Threaded connector ISO 228/1-G 1/4	100	1/4“	400 (15.75)	280 (11.02)	75.0 (2.44)	60 (2.36)	0	21.3 (0.84)	104 (4.09)	–	–	–	4 (8.8)
	Threaded connection ANSI/ASME B1.20.1-1/4" NPT	100	1/4“	400 (15.75)	280 (11.02)	75.0 (2.44)	60 (2.36)	0	21.3 (0.84)	104 (4.09)				
6 (1/4“)	Flange DIN 2635	40	DN 10	560 (22.05)	390 (11.02)	62.0 (2.44)	40 (1.57)	12 (0.47)	17.0 (0.67)	104 (4.09)	90.0 (3.54)	60.0 (2.36)	14.0 (0.55)	8 (17.6)
	Flange DIN 2637	100 (64)	DN 10	580 (22.83)	390 (11.02)	62.0 (2.44)	40 (1.57)	12 (0.47)	17.0 (0.67)	104 (4.09)				
	Flange DIN 2635	40	DN 15	638 (25.12)	390 (11.02)	62.0 (2.44)	40 (1.57)	12 (0.47)	17.0 (0.67)	104 (4.09)				
	Flange DIN 2637	100 (64)	DN 15	654 (25.75)	390 (11.02)	62.0 (2.44)	40 (1.57)	12 (0.47)	17.0 (0.67)	104 (4.09)				
	Flange ANSI / ASME B 16.5	Class 150	1/2“	624 (24.57)	390 (15.35)	62.0 (2.44)	40 (1.57)	12 (0.47)	17.0 (0.67)	104 (4.09)	88.9 (3.50)	60.5 (2.38)	15.7 (0.62)	
	Flange ANSI / ASME B 16.5	Class 600	1/2“	646 (25.43)	390 (15.35)	62.0 (2.44)	40 (1.57)	12 (0.47)	17.0 (0.67)	104 (4.09)				
	Flange ANSI / ASME B 16.5	Class 150	3/4“	670 (26.38)	390 (15.35)	62.0 (2.44)	40 (1.57)	12 (0.47)	17.0 (0.67)	104 (4.09)				
	Flange ANSI / ASME B 16.5	Class 600	3/4“	693 (27.28)	390 (15.35)	62.0 (2.44)	40 (1.57)	12 (0.47)	17.0 (0.67)	104 (4.09)				
	Screwed connection DIN 11851	40	DN 10	532 (20.94)	390 (15.35)	62.0 (2.44)	40 (1.57)	12 (0.47)	17.0 (0.67)	104 (4.09)	–	–	–	
	Screwed connection DIN 11851	40	DN 15	570 (22.44)	390 (15.35)	62.0 (2.44)	40 (1.57)	12 (0.47)	17.0 (0.67)	104 (4.09)				
	Tri-clamp, DIN 32676 (ISO 2852)	16	25 mm	570 (22.44)	390 (15.35)	62.0 (2.44)	40 (1.57)	12 (0.47)	17.0 (0.67)	104 (4.09)				
	Clamp, ISO 2853	16	25 mm	573 (22.56)	390 (15.35)	62.0 (2.44)	40 (1.57)	12 (0.47)	17.0 (0.67)	104 (4.09)				
	Threaded connector ISO 228/1-G 1/4	100	1/4“	562 (22.13)	390 (15.35)	62.0 (2.44)	40 (1.57)	12 (0.47)	17.0 (0.67)	104 (4.09)	–	–	–	
	Threaded connection ANSI/ ASME B 1.20.1-1/4" NPT	100	1/4“	562 (22.13)	390 (15.35)	62.0 (2.44)	40 (1.57)	12 (0.47)	17.0 (0.67)	104 (4.09)	–	–	–	
	Threaded connection ISO 228/1-G 1/4	EN1.4435 PN 265 EN2.4602 PN 410	1/4“	562 (22.13)	390 (15.35)	62.0 (2.44)	40 (1.57)	12 (0.47)	17.0 (0.67)	104 (4.09)				
	Threaded connection ANSI/ ASME B 1.20.1-1/4" NPT	EN1.4435 PN 265 EN2.4602 PN 410	1/4“	562 (22.13)	390 (15.35)	62.0 (2.44)	40 (1.57)	12 (0.47)	17.0 (0.67)	104 (4.09)				

Measurements in mm (inch)

Remote design, DN 1.5 (1/16“)

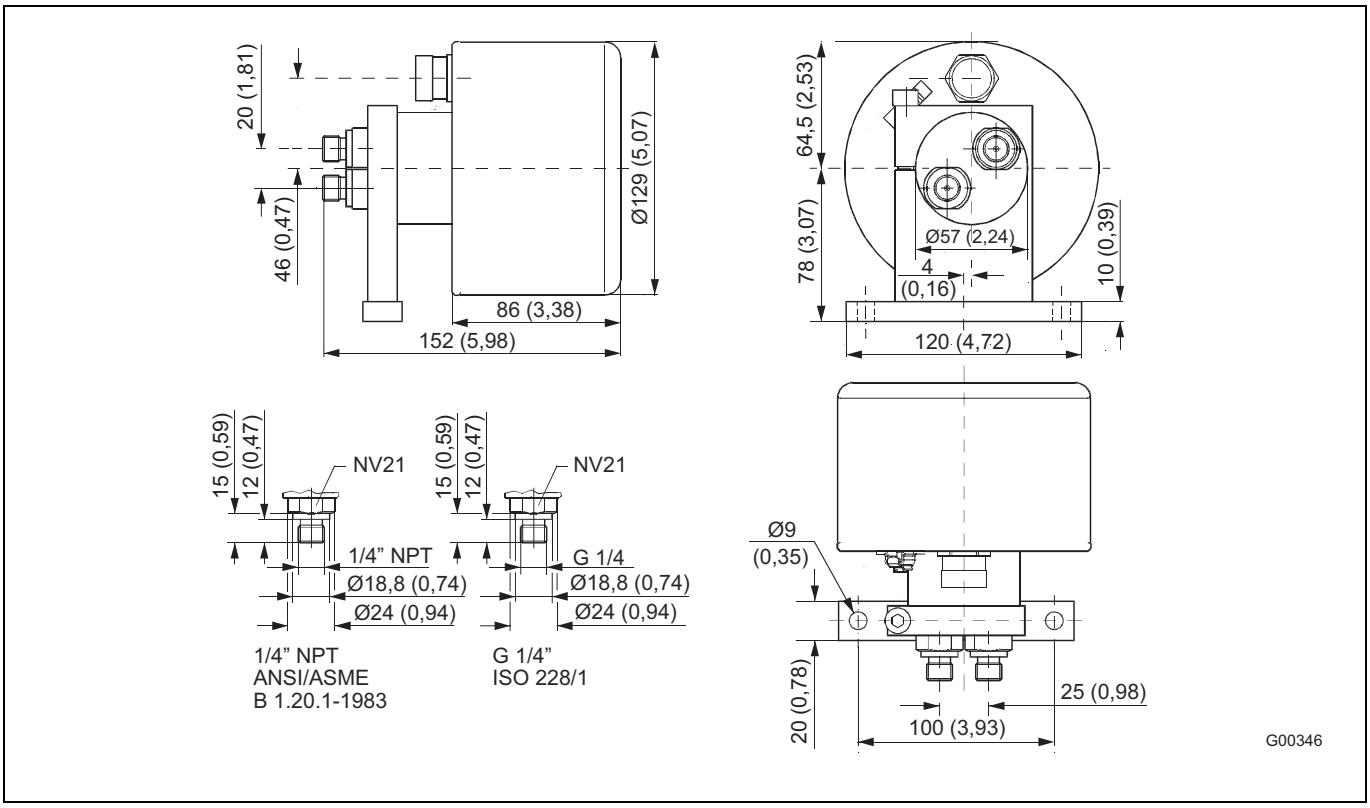

Fig. 37: Dimensions in mm (inch)

4.3 Ordering information

Remote mount sensor, DN 1.5 ... DN 6 (1/10 ... 1/4")

	Main order number														Additional order no.
Version number	1 - 3	4	5	6	7	8	9	10	11	12	13	14	15	16	
CoriolisMaster mass flowmeter FCM2000	**MS2**	**X**	**X**	**X**	**X**	**X**	**X**	**X**	**X**	**X**	X	X	X	X	
Design															
Remote mount flowmeter sensor, non-Ex or FM Div. 2		**1**													
Remote mount flowmeter sensor, ATEX Zone 1, FM Div. 1		6													
Application															
Standard/plug		1)	A												
ATEX Zone 1/plug		2)	B												
FMus Class I, Div. 1, Zone 1/plug		2)	C												
FMus Class I, Div. 2, Zone 2/plug		1)	O												
cFM Class I, Div. 1, Zone 1/NPT 1/2 in.		2)	D												
cFM Class I, Div. 2, Zone 2/NPT 1/2 in.		1)	P												
Certificates															
Standard				**1**											
Material certificate 3.1 to EN 10204				2											
Material certificate 3.1 to EN 10204 and pressure test to AD-2000				3											
Meter tube material															
Stainless steel AISI 316L (1.4435)					**3**										
Hastelloy C-22 (2.4602)					4										
Measuring range/Size/DN nominal															
0 ... 65 kg/h (0 ... 140 lbs/h)/"S"/DN 1.5 (1/17 in.)						**S**									
0 ... 250 kg/h (0 ... 550 lbs/h)/"T"/DN 3 (1/10 in.)						T									
0 ... 1,000 kg/h (0 ... 2,200 lbs/h)/"U"/DN 6 (1/4 in.)						U									
Temperature version															
Max. 125 °C (257 °F) (DN 1.5 [1/17 in.] only)							**1**								
Max. 180 °C (356 °F) (DN 3 [1/10 in.] and DN 6 [1/4 in.] only)						3)	2								
Process connection type															
G 1/4 in. ISO 228-1/PN 100								**A**							
1/4 in. NPT, ANSI/ASME B 1.20.1/PN 100								B							
Flange EN 1092-1 DN 10/PN 40 (DN 6 [1/4 in.] only)								C							
Flange EN 1092-1 DN 15/PN 40								P							
Flange EN 1092-1 DN 10/PN 100								Q							
Flange EN 1092-1 DN 15/PN 100								R							
Flange 1/2 in. /ASME Class 150 (DN 6 [1/4 in.] only)								I							
Flange 3/4 in. /ASME Class 150								U							
Flange 1/2 in. /ASME Class 600							4)	V							
Flange 3/4 in. /ASME Class 600								W							
DN 10 conforming to DIN 11851/PN 40 (DN 6 [1/4 in.] only)								M							
DN 15 conforming to DIN 11851/PN 40 (DN 6 [1/4 in.] only)								N							
Tri-Clamp 25 mm, ISO 2852/PN 16								J							
Housing design															
Standard								5)	**1**						
PN 230 (316L)								6)	2						
PN 350 (HC22)								7)	3						
PN 365 (HC22)								8)	4						
PN 265								9)	5						
PN 410								9)	6						
Heating/Cooling															
None										**0**					
Heating connection flange DN 15									10)	1					
Heating connection flange 1/2 in. ASME									10)	2					

Continued on next page

1) For MS21 only.
2) For MS26 only.
3) For size "S" on request.
4) With plug at flowmeter sensor.
5) See "Process connection type" for details.
6) With sizes "S", "T" only.
7) With size "T" only.
8) With size "S" only.
9) With size "U" only.
10) With sizes "T", "U" only